LAVINA by SUPERABRASIVE

ELITE SERIES

LAVINA ELITE L16EU

User Manual

SUPERABRASIVE

CE

www.superabrasive.com / factory@superabrasive.com

Table of Contents

LAVINA ELITE L16EU 1

WARRANTY AND RETURNS 4

1. GENERAL INFORMATION 5

1.1 MANUFACTURER 5
1.2 GENERAL DESCRIPTION 5
1.3 ENVIRONMENTAL CONDITIONS 5
1.4 VACUUM CONNECTION 6
1.5 LAVINA® 16EU MAIN COMPONENTS 6
1.6 TECHNICAL DATA 7
1.7 VIBRATIONS 7
1.8 CE-CERTIFICATION 7

2. SAFETY INSTRUCTIONS RECOMMENDED USE 8

2.1 PROHIBITED USE 8
2.2 PREPARATION FOR WORK 8
2.3 PROTECTION DEVICES 8
2.4 ARREST FUNCTIONS 8
2.5 SAFE USE 8
2.6 RESIDUAL RISKS 9
2.7 BEFORE YOU BEGIN 9
2.8 OPERATING MACHINE 9
2.9 AFTER WORK IS COMPLETED 9
2.10 THE WORK AREA 9
2.11 PERSONAL PROTECTION EQUIPMENT (PPE) 10
2.12 OPERATOR 10

3. HANDLING AND TRANSPORTATION 11

3.1 ADJUSTING THE COLUMN ANGLE 11
3.2 TURNING THE HANDLE 12
3.3 TURNING THE MACHINE FROM WORKING TO TOOL MOUNTING POSITION 12
3.4 LIFTING 13
3.5 STORAGE 13

4. OPERATION 13

4.1 PRELIMINARY CONTROLS 13
4.2 ADJUSTING AND MOUNTING TOOLS 13
4.4 VACUUM CONNECTION 14
4.5 CONTROL BOARD 15
4.6 STARTING THE MACHINE 15
4.7 OPERATING THE MACHINE 15
4.8 STOPPING THE MACHINE 16

5. TOOLS AND ACCESSORIES 16

6. POPULAR TOOLS 17

7. MAINTENANCE AND INSPECTION 18

7.1 CLEANING 18
7.2 CHECK HOURLY 18
7.3 CHECK DAILY 18
7.4 CHECK AND REPLACE EVERY 200 WORKING HOURS 18

7.5 CHECK AND REPLACE EVERY 400 WORKING HOURS 18
7.6 VACUUM 18
7.7 MECHANICAL PARTS 19
7.8 ELECTRICAL SYSTEM 19

8. TROUBLESHOOTING 21

8.1 SEPARATING THE HEAD FROM THE CARRIAGE 21
8.2 DISMOUNTING/MOUNTING THE GUARD 22
8.3 REPLACING POWER CORD AND PLUGS 22
8.4 DISMOUNTING AND MOUNTING THE TOOL HOLDER TO CHANGING V-RINGS AND FELT-RINGS 22
8.5 DISASSEMBLING AND MOUNTING THE TOOL HOLDER TO CHANGE BUFFERS AND ELASTIC ELEMENT 23
8.6 TENSIONING A USED PLANETARY BELT 24
8.7 MOUNTING AND TENSIONING A NEW PLANETARY BELT 25
8.8 REPLACING PULLEY UNITS 26
8.9 MOUNTING, CHECKING, TENSIONING AND REPLACING THE MAIN BELT 27

9. DISPOSAL 28

10. MANUFACTURER'S CONTACTS 28

WARRANTY AND RETURNS

WARRANTY POLICY FOR LAVINA® ELITE MACHINES

A warranty card must be submitted to Superabrasive within 30 days of purchase in order for the foregoing warranty to apply.

You can either mail a hard copy of the warranty card or submit it electronically - see page 2.
Superabrasive warrants, from the time of delivery and receipt by the original customer, new and unused products sold by Superabrasive or Superabrasive-appointed distributors or dealers. Goods shall be free from defects in materials and workmanship. Superabrasive or a Superabrasive-appointed repair facility shall either replace or repair any defects in the Goods resulting from faulty design, materials, or workmanship. Products repaired or replaced during the warranty period shall be covered by the foregoing warranty for the remainder of the original warranty period, or ninety (90) days from date of the repair or shipment of the replacement, whichever is longer. Spare parts for repair will be either new or equivalent to new.

Warranty period shall be 2 years from the time of delivery and receipt by the original customer, or 600 operating hours on the machine - whichever occurs first. Superabrasive will cover the shipping charges for the transportation of the machine to Superabrasive (or an approved repair facility) and back to the customer (within the contiguous 48 United States) in the event that the damage occurs and is reported within 200 operating hours. Shipping charges, if covered by Superabrasive, must be agreed upon in advance and approved by Superabrasive. Thereafter, the customer will have to cover the shipping charges to Superabrasive and back. Superabrasive will not warranty Goods after a period of 2 years from the time of delivery and receipt by the original customer, or 600 operating hours on the machine - whichever occurs first.
Superabrasive shall not be liable for any defects that are caused by circumstances that occur after the Goods have been delivered and whilst the Goods are in the possession of the purchaser. Furthermore, the warranty does not include normal wear and tear or deterioration. Wear parts are not warranted. Superabrasive is not liable for defects arising out of use of non-OEM parts.

The Warranty is void if the purchaser has not followed the maintenance plan stipulated by the machine's manual and warranty card. The warranty is void if the purchaser repairs said Goods himself, or if repairs are conducted by a repair facility that is not approved by Superabrasive. Superabrasive's liability does not cover defects which are caused by faulty maintenance, incorrect operation, faulty repair by the purchaser, or by alterations conducted without Superabrasive's prior written consent. The same applies to any alterations of the Goods or services performed by another party other than Superabrasive, a Superabrasive-appointed distributor, or a Superabrasive-approved repair facility. The warranty is not applicable on a defect that arises due to tools or parts that are not original to Superabrasive. Replaced defective parts shall be placed at Superabrasive's disposal and shall become property of Superabrasive. If such defective parts are replaced
within the warranty period, the shipping charges will be covered by Superabrasive. In warranty complaint cases, when no defects are found for which Superabrasive is liable, Superabrasive shall be entitled to compensation for the labor, material cost, and shipping charges, incurred by Superabrasive as as a result of the complaint.

The warranty herein is non-transferable, and only applies to the original owner or purchaser of the machine.

RETURN POLICY FOR LAVINA® ELITE MACHINES

The Lavina® ELITE machines may be returned, subject to the following terms:
In no case, a machine is to be returned to Superabrasive Inc. for credit or repair without prior authorization. Please contact Superabrasive Inc. or your local distributor for an authorization and issuance of a return authorization number. This number along with the serial number of the machine must be included on all packages and correspondence. Machines returned without prior authorization will remain property of the sender and Superabrasive Inc. will not be responsible for them. No machines will be credited after 90 days from the date of invoice.

All returns must be shipped freight prepaid. Returned machines may be exchanged for other equipment or parts of equal dollar value. If machines are not exchanged, they are subject to a fifteen percent (15%) restocking fee.

1. GENERAL INFORMATION

This owner's manual is intended for the operator of the Lavina® ELITE machine, the servicing technician as well as for anyone involved with operating or servicing the machine. We recommend that you read the instructions very carefully and follow them strictly. The manual includes information about assembling, using, handling, adjusting and maintaining your Lavina® ELITE floor grinding and polishing machine.

1.1 MANUFACTURER

Superabrasive was founded in 1987, as a manufacturer of high quality diamond tools for the stone and concrete industry. Today, Superabrasive is one of the world's leading companies in the production of diamond tools and floor grinding machinery. At Superabrasive, we strive to deliver the very best solutions to our customers, and enable them to work more efficiently.

1.2 GENERAL DESCRIPTION

The Lavina®16 ELITE machine is intended for grinding, polishing and buffing concrete, marble, granite, limestone and terrazzo surfaces with diamond tools. Additionally, the machine could be used for grinding wood floor surfaces.
The Lavina®16 ELITE machine is a three-disc machine, which can be used wet or dry.
The handlebars can be moved and fixed to either side, allowing the operator to follow the edge of a wall comfortably.
It is very light and easy to transport, and thanks to its foldable frame design can be disassembled and loaded in the back of a compact car or SUV in minutes (fig.1.1), (fig.1.2).

Figure 1.1

Figure 1.2

For best results, use only tools manufactured or recommended by Superabrasive and its distributors.

⚠ WARNING

The Lavina® ELITE machine is manufactured and fitted for the above-mentioned applications only! Every other use may possess risks to the persons involved.

1.3 ENVIRONMENTAL CONDITIONS

The temperature range for operating the Lavina® ELITE machine outdoors is between 41°F and 86°F or 5°C and 30°C. Never use the Lavina® ELITE machine during rain or snow when working outdoors. When working indoors, always operate the machine in well- ventilated areas.

1.4 VACUUM CONNECTION

A connection for a vacuum dust extractor is located on the carriage. The Lavina® ELITE machine does not include a vacuum dust extractor. The customer must purchase the vacuum dust extractor separately. The vacuum dust extractor must be adapted for floor grinders and have a minimum air displacement of 310m3/h with a negative vacuum of 21 kPa.

1.5 LAVINA® 16EU MAIN COMPONENTS

The Lavina® ELITE machine is made of two main component sections:- carriage (1) and head (2) (fig.1.3).

1.5.1 Carriage which contains:

- **Handle - the handle** on the frame is adjustable in height and allows the operator to work in a correct and safe posture (see point 3. Handling and transportation).
- **The control panel** (fig.1.4) is positioned on top of the frame and contains buttons and switches for start/stop the machine , RPMs control switch , EMG button.
- **Power box** is positioned on top and hour meter unit.

1.5.2 Machine head which contains:

- **The Electric motor -** its mounted on the base plate and it is driving the three heads with a belt system.
- **The planetary motion -** it derives from the main engine, driven by a second belt.
- **The self-leveling Guard** is designed to have contact with the surface. Anytime, no matter the height of the tool used.
- **"Quickchange" tool holder** is designed to hold the tools with "Quickchange"connection (All of our new tools use the "Quickchange" connection and there is no more foam holders).

Figure 1.3

Figure 1.4

1.6 TECHNICAL DATA

TECHNICAL DATA	**Lavina® 16EU**	
Voltage/Hz	1 ph x 220-240V 50-60Hz	
Amperage	Max 12 Amps	
Power	2.2 kW	3 HP
Tool holder rpm	300-900 rpm	
Working width	406 mm	16”
Tool holder diameter	3 x 178 mm	3 x 7”
Weight	98 kg	216 lbs
Grinding pressure	67 kg	148 lbs
Application	wet and dry	
Vacuum hose port	Φ 50,8 mm	2”
Machine LxWxH	1210x462x965 mm	47.6”x 18.2”x 38”
Packing crate LxWxH	770x520x875 mm	30.3”x 20.5”x 34.4”

1.7 VIBRATIONS

The vibrations of the machine are within the limits of directives and harmonized standards from the European Union when the
Lavina® ELITE is operated with the recommended tools and in normal conditions.

SONOROUS EMISSIONS

The sonorous emissions are within the limits of directives and harmonized standards from the European Union when the Lavina® ELITE is operated with the recommended tools and in normal conditions. The operator must wear ear protectors.

LABEL DATA

The data on the label provides the correct Voltage and kW (needed for operational purposes);
Weight (needed for transportation purposes); production year and serial number (needed for maintenance purposes).

CUSTOMER SERVICE

For customer assistance and technical support call your local distributor or call Superabrasive Inc. at
1-800-987-8403 or visit us at: www.superabrasive.com , where you can download a copy of this manual.

1.8 CE-CERTIFICATION

The Lavina® ELITE machine is designed to operate correctly in an electromagnetic atmosphere of industrial type and is equipped with all the mechanical and electrical safety protections in conformity with the following European CEE rules and regulations:
The Lavina® ELITE machine complies with the Safety Directive for machines 2006/42/EC, the EMC Directive 2004/108/EC and the Low Voltage Directive 2006/95/EC.
Also complies with the norms in use BDS EN ISO 12100, BDS EN 13862,BDS EN ISO 13857, BDS EN 349, BDS EN ISO 13850,BDS EN 13732-1, BDS EN 953, BDS EN ISO 13849-1,BDS EN 1037, BDS EN ISO 5349-1, BDS EN ISO 11201, BDS EN ISO 3744, BDS EN 1033:2002, BDS EN 60204-1,BDS EN 1837, BDS EN 61000-6-4, BDS EN 61000-6-2, BDS EN 61000-4-2, BDS EN 61000-4-4, BDS EN 61000-4-5,BDS EN 61000-4-11, BDS EN 55016-2-1
The machine is delivered with a EC declaration of conformity.

2. SAFETY INSTRUCTIONS RECOMMENDED USE

The LAVINA® ELITE machine is
designed and manufactured to grind and polish concrete, terrazzo, and natural stone floors. It can be used for renovations as well as for polishing. The machine is designed for dry or wet use. When using it dry, use a vacuum of appropriate size. For more information, please refer to the chapter on handling the
vacuum connection.

⚠ WARNING

2.1 PROHIBITED USE

The machine MUST NOT be used:

For applications different from the ones stated in the General
Description chapter.
For not-suitable materials.
In environments which: Possess risks of explosion
Possess high concentration of powders or oil substances in the air
Possess risks of fire
Feature inclement conditions. Possess electromagnetic radiation.

⚠ WARNING

2.2 PREPARATION FOR WORK

Make sure that You have closed
the work area, so that no person unfamiliar with operating the machine can enter the area. The tool plate and tools are adjusted to the machine properly. There are no missing parts of the machine.
The machine is in upright working position. The protection devices are working properly. The electrical cable is free move and follow the machine easily. In order to keep the electrical cable from being
damaged, no vehicle should cross the zone where electrical cables are situated.

⚠ WARNING

2.3 PROTECTION DEVICES

The machine is equipped with several protection devices including the following:
An emergency stop button
A protection skirt and hood for protecting the tool plates.
These devices protect the operator and/or other persons from potential injuries. Do not remove them. On contrary, before using the machine, please ensure that all protection devices are mounted and function properly. The Security plate prevents the QuickChange pads from loosening during use.

⚠ WARNING

2.4 ARREST FUNCTIONS

Functions of arresting the machine are following: Button to stop the motor (category 1)
Emergency button (category 1)

⚠ WARNING

2.5 SAFE USE

The LAVINA® ELITE is designed to
eliminate all risks correlated with its use. However, it is not possible to eliminate the risks of an eventual accident with the machine. Unskilled or uninstructed operator may cause correlated residual risks. Such risks are:
Position Risks due to operator's incorrect working position Tangling up Risks due to wearing inappropriate working clothes
Training Risks due to lack of operational training
NOTE: In order to reduce all consequences of the above- mentioned risks, we advise that machine operators follow the instructions in the manual at all times.

⚠ WARNING

2.6 RESIDUAL RISKS

During the normal operating
and maintenance cycles, the operator is exposed to few residual risks, which cannot be eliminated due to the nature of the operations.

⚠ WARNING

2.7 BEFORE YOU BEGIN

Working area must be clear
from any debris or objects.
A first-time operator must always read the manual and pay attention to all safety instructions.
All electric connections and cables must be inspected for
potential damages.
Ground wire system of the power supply must be also inspected. Perform general daily inspections of the machine and inspect the machine before each use.
Always inspect the safety devices: Mount the Security plate for the Quickchange pads.
The emergency break must be clear and working
The tool protector must be working
The machine must be clean
Never operate the machine in the rain!
Confirm that there are no missing parts especially after
transportation, repair, or maintenance.
Before filling the water tank with water make sure the machine is not working and the main switch is turned off.
Before turning on the machine make sure that the base is placed on the floor, the machine MUST NOT be in an upright position when turned on!

⚠ WARNING

2.8 OPERATING MACHINE

When operating the LAVINA® E, make certain that there is no one, but you around the machine.
Never leave the machine unattended while working.
The electrical cable must move freely and must be damage-free.
The water hose must move freely and must be damage-free.
Check the floor you will work on to make sure it is not too uneven. If this is the case, it may damage the machine.

⚠ WARNING

2.9 AFTER WORK IS COMPLETED

Clean the machine and its
surroundings properly
Empty and clean the water tank
Unplug the machine and wind up the electrical cable
Store the machine in a safe place

⚠ WARNING

2.10 THE WORK AREA

Make certain that people or
vehicles do not enter the work area.
Avoid cables and hoses being in the way. Always check the floor for debris

⚠ WARNING

2.11 PERSONAL PROTECTION EQUIPMENT (PPE)

Always wear safety shoes when working with the machine. Always wear ear protectors when working with the machine.
All personnel in the immediate work area must wear safety glasses with side shields.
Always wear safety gloves when changing the tools. Always wear clothes suitable for the work environment.

⚠ WARNING

2.12 OPERATOR

The LAVINA® E machine.
The operator must know the machine's work environment. Only one operator at a time can work with the machine. The operator must be properly trained and well instructed prior operating the machine.
The operator must understand all the instructions in this manual.
The operator must understand and interpret all the drawings and designs in manual.
The operator must know all sanitation and safety regulations pertaining to the operation of the machine.
The operator must have floor grinding experience.
The operator must know what to do in case of emergency.
The operator must have an adequate technical knowledge and preparation.

3. HANDLING AND TRANSPORTATION

3.1 ADJUSTING THE COLUMN ANGLE

You can adjust the angle of the column for several purposes, such as transporting or flipping the machine for tool change. Making the column straight makes it easier to work in narrow places (Fig. 3.1, Fig. 3.2).

Figure 3.1

Figure 3.2

To adjust the column, turn the lever lock and rotate the column (Fig. 3.3).

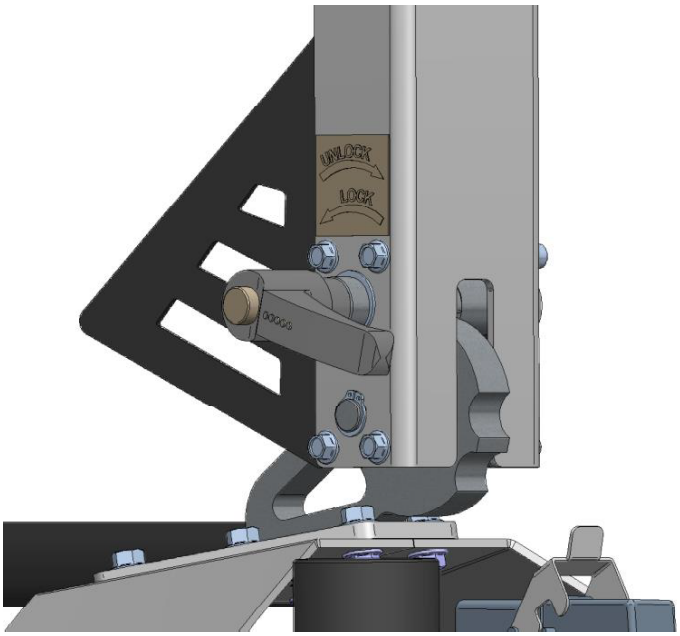

Figure 3.3

3.2 TURNING THE HANDLE

The Handle on the frame is adjustable in height and allows the operator to work in a correct and safe posture**. To adjust, simply pull the locking pin (fig.3.4) and move the frame. A loaded spring will return the pin and lock the handle in any of several positions (fig.3.5).**

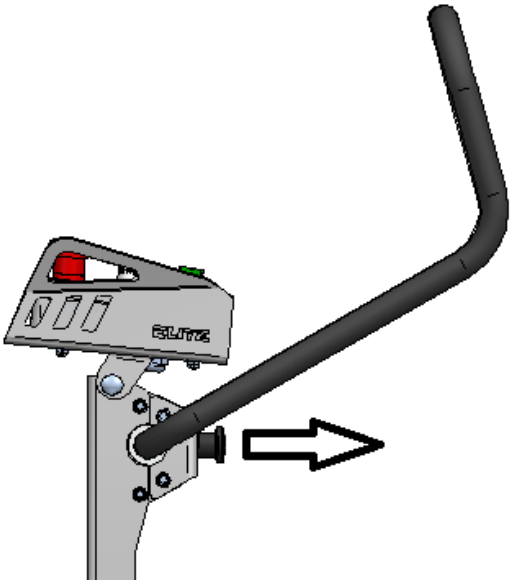

Figure 3.4

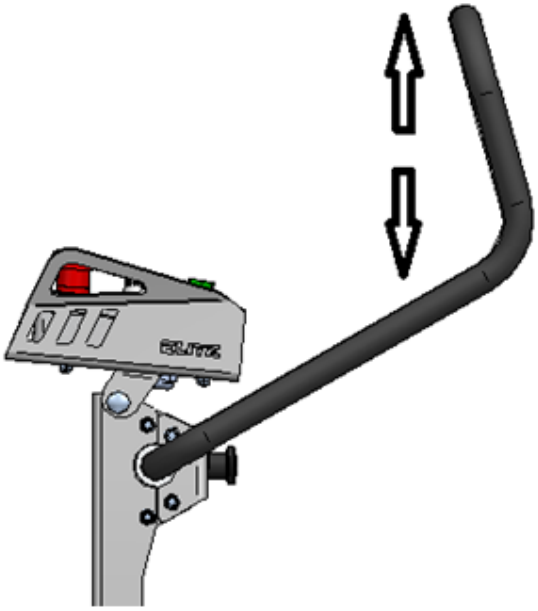

Figure 3.5

3.3 TURNING THE MACHINE FROM WORKING TO TOOL MOUNTING POSITION

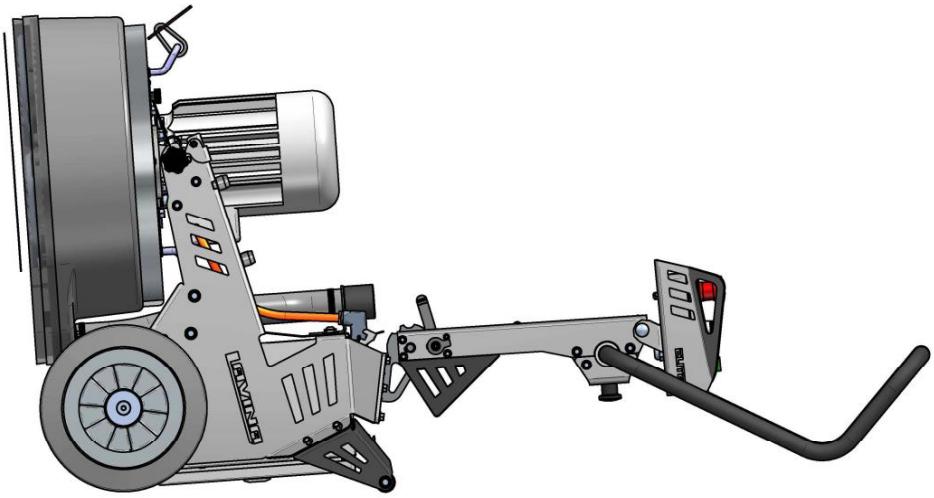

Figure 3.6

3.4 LIFTING

Lifting the machine by crane is possible by using the handle of the carriage (see fig. 3.5 and fig. 3.6).Do not lift any other loads on the machine. Always use hoisting equipment rated for 100 kg (220 lbs) or greater.

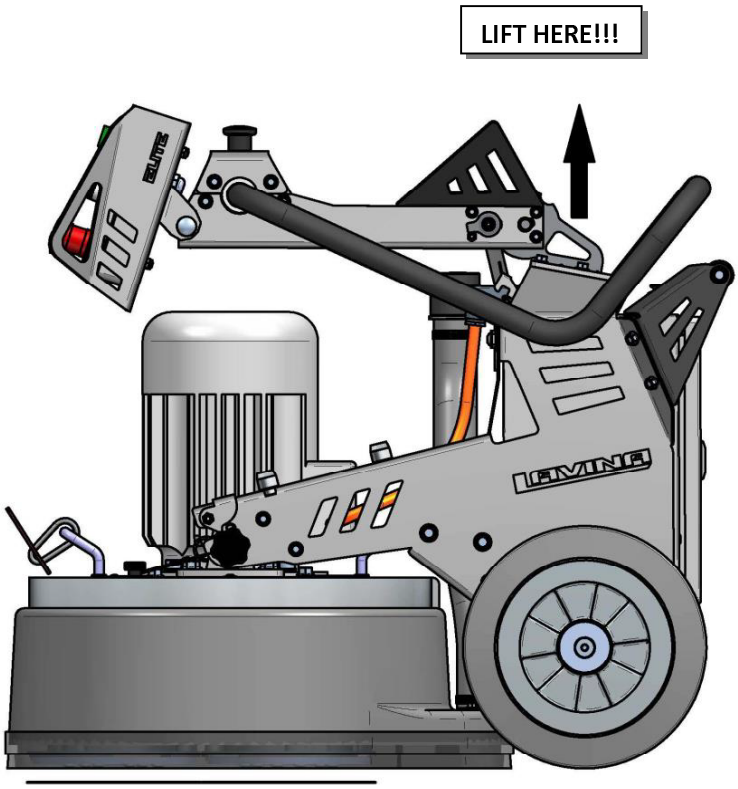

Figure 3.7

3.5 STORAGE

Always store the LAVINA® ELITE machine in a dry place. Never transport the LAVINA® ELITE machine unprotected; it may be damaged if transported unprotected and exposed to rain or snow.

4. OPERATION

4.1 PRELIMINARY CONTROLS

Inspect the working area as explained in the safety instructions. Connect the vacuum extractor and ensure that the vacuum hose is clear and it will follow the machine easily.
Make sure that the electrical motor is connected with the power box and then you can connect the power cable with the electricity and start the machine.

4.2 ADJUSTING AND MOUNTING TOOLS

⚠ WARNING

The machine should be not connected to electricity when changing the tools.

To change tools flip the carriage over to the floor. Ensure first if the handle and the column is in the upright position (Fig. 3.6).

Mount the tools only after ensuring that there is enough diamond bond material left. Be sure that the plates are always clean before mounting

WARNING: Always Secure the Quick Change tools with the security plate (2) (Fig.4.1), lock with the tool holder key (3) and make sure that the butterfly (1) is securely locked at 90 degrees. Diamond tools with Velcro are attached on three foam plates (7 inch). The foam plates are mounted on the key lock (butterfly). Always use the tool holder key .

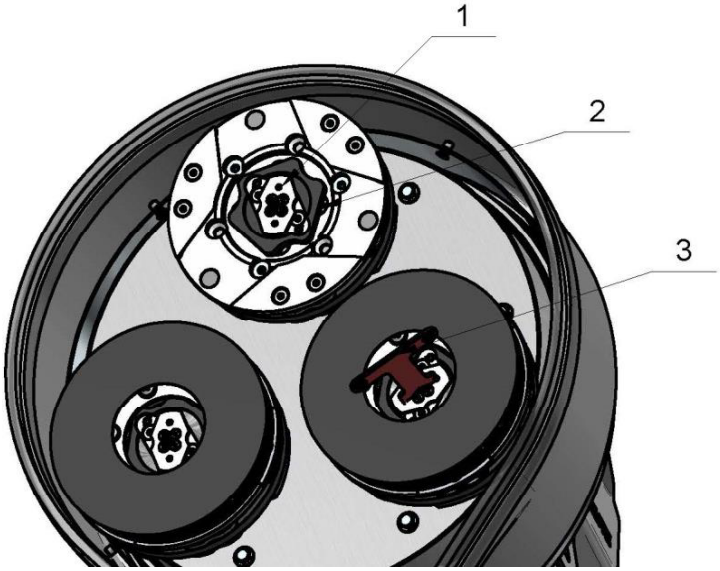

Figure 4.1

4.4 VACUUM CONNECTION

To connect a vacuum cleaner, the Lavina 16EU is supplied with vacuum hose diam.2 in (50mm) (Fig.4.2).

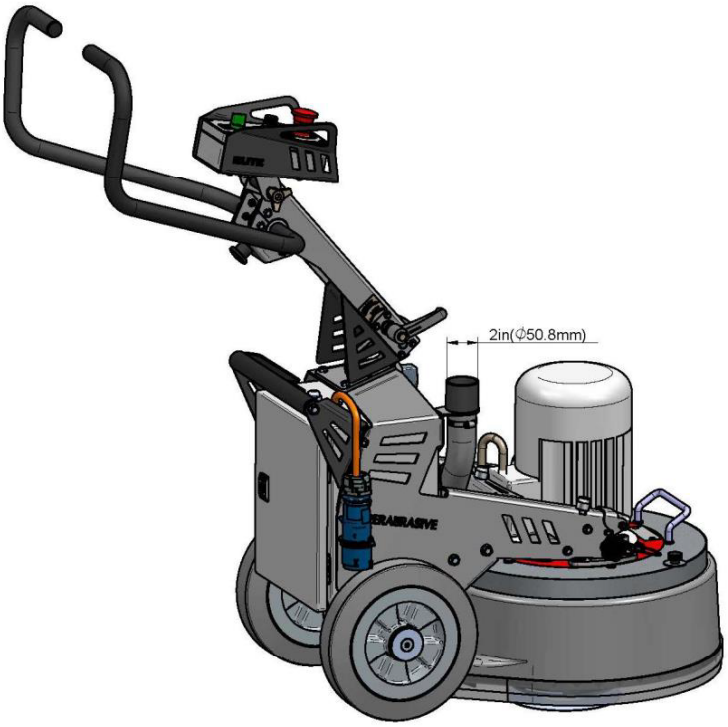

Figure 4.2

4.5 CONTROL BOARD

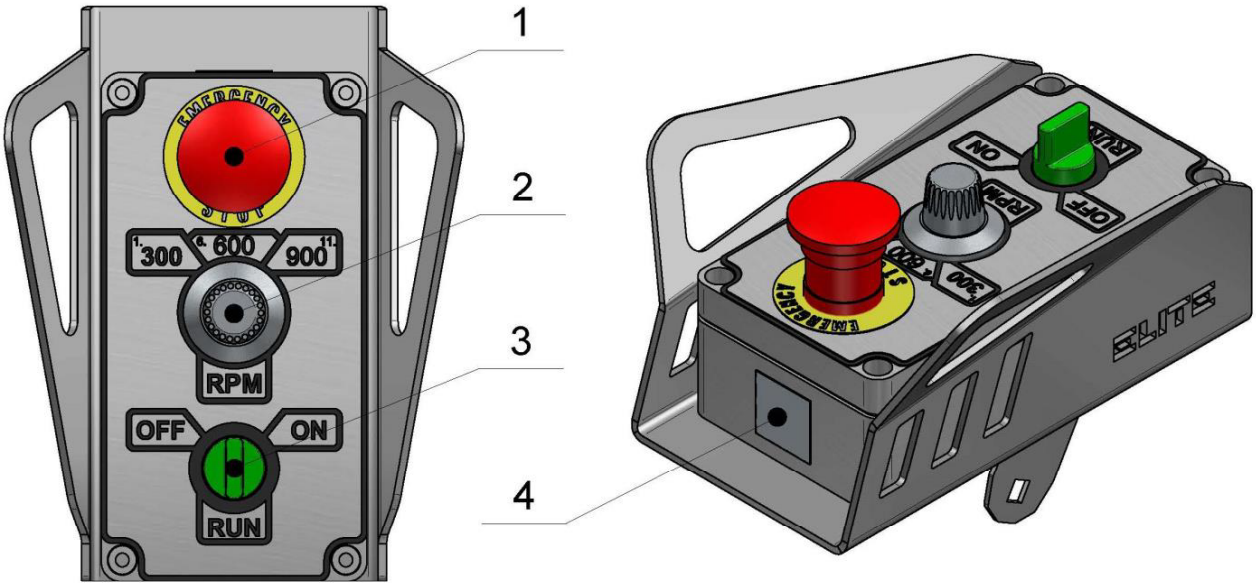

Figure 4.3

1. EMERGENCY button used to stop the motor in case of emergency.
2. Potentiometer. Controls the RPM of the grinding plates in a range of 300-900 rpm.
3. ON / OFF switch. The switch returns to its starting position after being released.
4. QR code. When you scan it with your phone for example, it will redirect your browser to Lavina manuals page.
5. Working orking hours meter . Displays total number of hours worked with the machine (Fig 4.4).

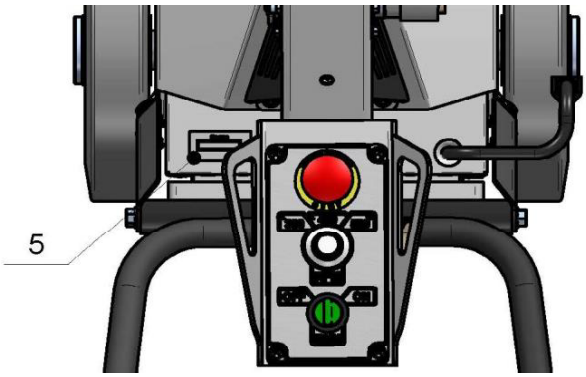

Figure 4.4

4.6 STARTING THE MACHINE

First, follow the directions in the chapter on Safety Devices and Safety Instructions. Next, release the emergency stop (1) (Fig. 4.3) , Check the potentiometer (2), and ensure that it is set to the working speed. If you are working dry make sure your machine is connected to the vacuum unit. Finally, hold the machine firmly and turn the switch (3) to the ON position.

4.7 OPERATING THE MACHINE

Guide the machine in straight lines across the floor, slightly overlapping the previously completed surface with each new line. Work at a constant speed, allowing the tools time to work at a speed appropriate for the tools' grit size. Avoid vibrations. Do not stop the machine while tools are still running as they will mark the surface of the floor. When working dry, check the floor surface periodically for dust accumulation. Check regularly to see if you're vacuum works properly.

4.8 STOPPING THE MACHINE

The stopping of the machine must be done gradually until the motor stops. Do not stop moving the machine before the motor comes to rest, as the tools could damage the surface.
To stop the machine:
-Turn the **ON/OFF** (3) (Fig 4.3) switch in position OFF, this will cut the voltage to the invertor.

5. TOOLS AND ACCESSORIES

Figure 5.1

Superabrasive offers additional weights of 18.5 lbs or 8 kg (Fig.5.1). The weights stack on the 3 posts around the outer bowl or on top of each other. The additional weights depend on the tools; it is not always possible to add weights. Some tools work too aggressively can cause the machine to stop. No more than 4 weights should be added. They can be ordered with item number L21-50.00.00.

The tool holder key (Fig. 5.2) is used for mounting and dismounting the security plate. Always use the key for mounting.

Item number is A03.00.00.00

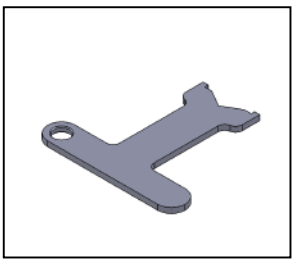

Figure 5.2

Security Plate (Fig.5.3) used to ensure the "Quickchange" tools.
Item number is A38.00.04

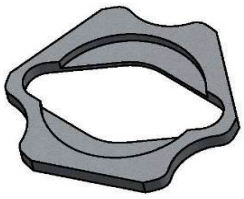

Figure 5.3

Diamond tools with Velcro are mounted on the foam plate 7"(Fig.5.4). The foam plate is mounted on the "QuickChange" System.

Item number is LV-7-FP-S

Figure 5.4

6. POPULAR TOOLS

RECOMMENDED TOOLS

QuickChange System and Tooling feature extremely fast and convenient tool changes, and a long tool life, providing for great long-term cost savings. The QuickChange pads are produced in four different bonds for super hard, hard, medium and soft concrete, in a variety of grit sizes. They are offered with 1 or 2 buttons or rectangular segments, which allows you to customize the aggressiveness of the cut.

Calibra grinding discs: our popular ceramic bond discs are designed for the removal of difficult scratches and they save you valuable time by eliminating the need for multiple passes with metal tools. They can be used wet or dry, and are best for hard concrete applications. They are 3-inch, with included Velcro back attachment.

NATO® polishing discs feature a special resin formula designed for both wet and dry applications and a unique design with wide channels allowing for work on a cleaner surface and ensuring a quality polish. Available in 3 and 4 in sizes. They are with Velcro attachment.

V-HARR® Premium Polishing Pads are designed for mechanically polishing and restoring concrete; also ideal for terrazzo and hard stone floors. . V-HARR® pads are offered in a wide variety of diameters and grit sizes to accommodate many applications. Dry use is strongly recommended.

Shine Pro® are high quality diamond-integrated pads for floor maintenance. Available in a variety of sizes, they are great for daily use. When used wet, they require only water (no wax or chemicals needed), making them a very environmentally-friendly solution for maintaining floors.

Use Only Superabrasive's Recommended Tools. For More Tooling Options, Visit www.superabrasive.com

7. MAINTENANCE AND INSPECTION

7.1 CLEANING

Keep your machine clean. Cleaning the machine on a regular basis will help detect and solve potential problems before they cause damage to the machine. Most importantly, check and clean the tool plate connections and the vacuum hoses.

7.2 CHECK HOURLY

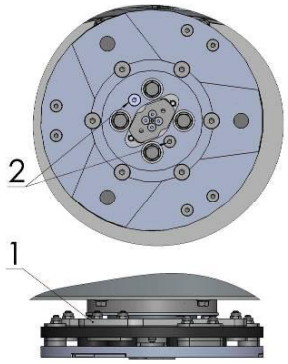

Figure 7.1

7.3 CHECK DAILY

After operating the Lavina® ELITE machine, the operator should conduct a visual inspection of the machine. Any defect should be solved immediately. Pay attention to power cords, plugs and vacuum hoses, loose bolt or screws.

Tool holders: Buffers and elastic element are consumables and must be visually checked daily and replaced if needed. See that flanges or discs are mounted and locked well in place. The key lock holders (butterflies) should be also checked.

Check the rubber buffers and fixing of the holders. The flange holding the buffers (Fig.7.1_1) has to be firmly fixed to the unit. A gap seen there means that there are loose screws fixing the holder. The screws have to be tightened immediately for safe operation. Working with loose screws on the holder could also cause bad damages on the machine. Tightening force of the screws has to be 22...25N.m(16...18 ft/lbs).

It is very important to regularly check the screws (Fig.7.1_2) that fix the "Quickchange" holder to the safety part, so that the holder will not fly away if the buffers get damaged. "Quickchange" should be clean.

7.4 CHECK AND REPLACE EVERY 200 WORKING HOURS

Every 200 working hours the operator should inspect all parts of the machine carefully. Most importantly, inspect and clean the tool plate connections and vacuum hoses. Check the guard assembly. Make certain the wheels are clean and rotate properly. Inspect the control buttons. If there are defective control parts, they should be replaced immediately. Replace worn vacuum hoses.

Carefully inspect the seal rings and bearings of the grinding units, and replace any showing signs of excessive wear. For more information, refer to chapter troubleshooting below.

Separate the carriage from the main head. Unscrew the four bolts (1)(Fig.7.2), and remove the upper cover (2)(Fig.7.2). Check the planetary driving belt, by moving the main head, the belt should not slip on the planetary (central) pulley.

Dismount the tool holders (See TROUBLESHOOTING), and replace all parts (elastic element, buffers, sealer caps, "O" rings) that show any damage.

Dismount the tool holders (See Troubleshooting) replace all parts (elastic element, buffers, and sealers) with the slightest damage or consume. **Return** machine to **authorized service center** for overall checkup of the Engine

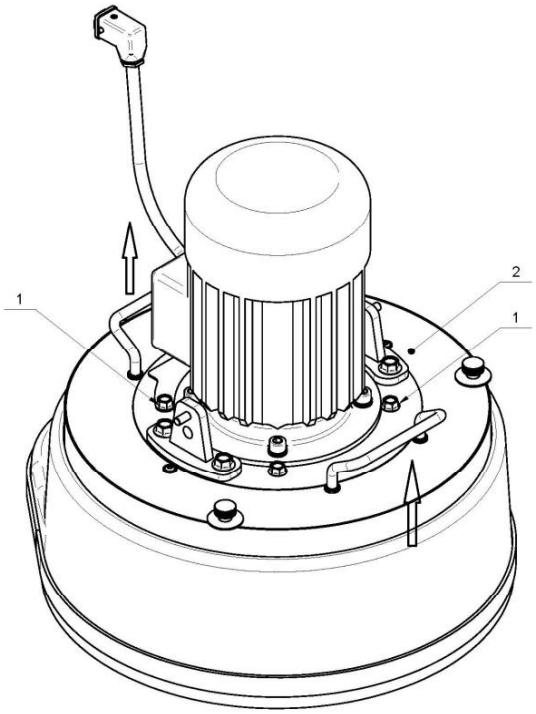

Figure 7.2

7.5 CHECK AND REPLACE EVERY 400 WORKING HOURS

Besides the checks of 200 working hours, replace sealer and V-rings like described in chapter "TROUBLESHOOTING REPLACING BELT AND PULLEY UNITS. Check if belts and bearings are in good condition, change if needed.
Return machine to authorized service center for overall checkup of the Engine

7.6 VACUUM

As stated previously, frequently check hoses and othe r parts for clogging.

7.7 MECHANICAL PARTS

Parts such as the belts, seal rings, cap rings, spiders and buffers and guard assembly are subject to wear and should be replaced as needed.

OPERATION	INTERVAL		
	Daily	Every 200 Hrs.	Every 400 Hrs.
Inspect power cords, plugs and vacuum hoses, loose bolt or screws.	X		
Check the rubber buffers, elastic element and fixing of the holders	X		
Inspect and clean the tool plate connections		X	
Inspect the seal rings and bearings of the grinding units		X	
Check the planetary belt		X	X
Replace V-rings			X
Check belts and bearings			X

7.8 ELECTRICAL SYSTEM

Dust should not enter the control box, as it will destroy the contacts. Remove (blow out) any dust present

ELECTRICAL SCHEME

A plug should be attached to the cable (min. 16A; 240V, IP55) according to the standards of the country where the machine will be operated.

The plug should be attached by a a licenced electrician. The yellow-green cable is ground. ⚠ WARNING

We recommend that the cable is H07BQ-F3x2,5mm² with a maximum length of 20 meters. A socket (min. 16A; 240V IP55) should be attached to the cable according to the standards of the country where the machine will be operated.

When replacing the power cord or plugs, always use cords and plugs with the same specifications as the original ones. Never use lower quality or different type cord and plugs.

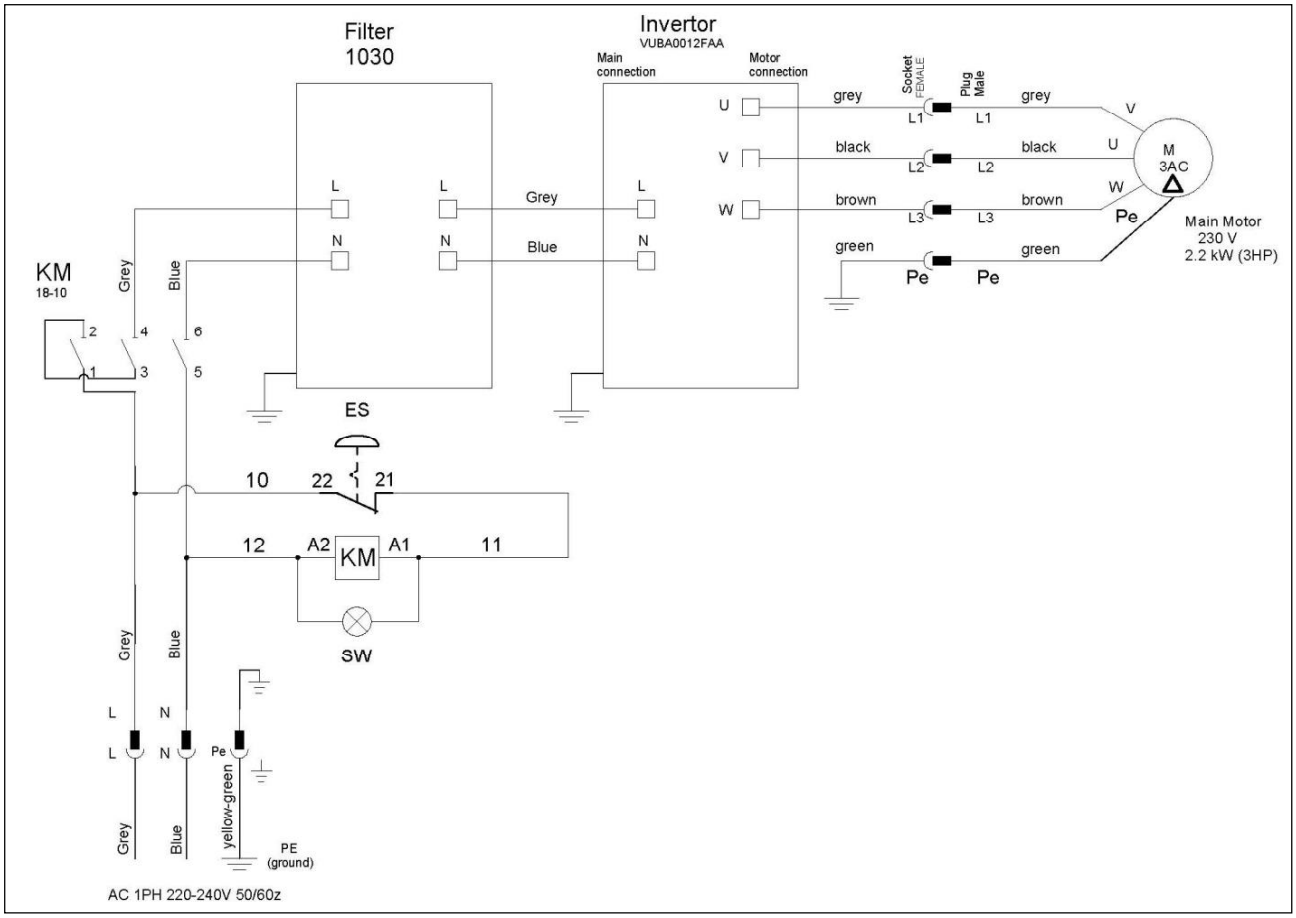
Filter
1030
Invertor
VUBA0012FAA
Main connection
Motor connection
Socket FEMALE
Plug Male
grey
black
brown
green
L1
L2
L3
Pe
U
V
W
M
3AC
Main Motor
230 V
2.2 kW (3HP)
L
N
Grey
Blue
KM
18-10
ES
10
22
21
12
A2
A1
11
SW
yellow-green
PE
(ground)
AC 1PH 220-240V 50/60z

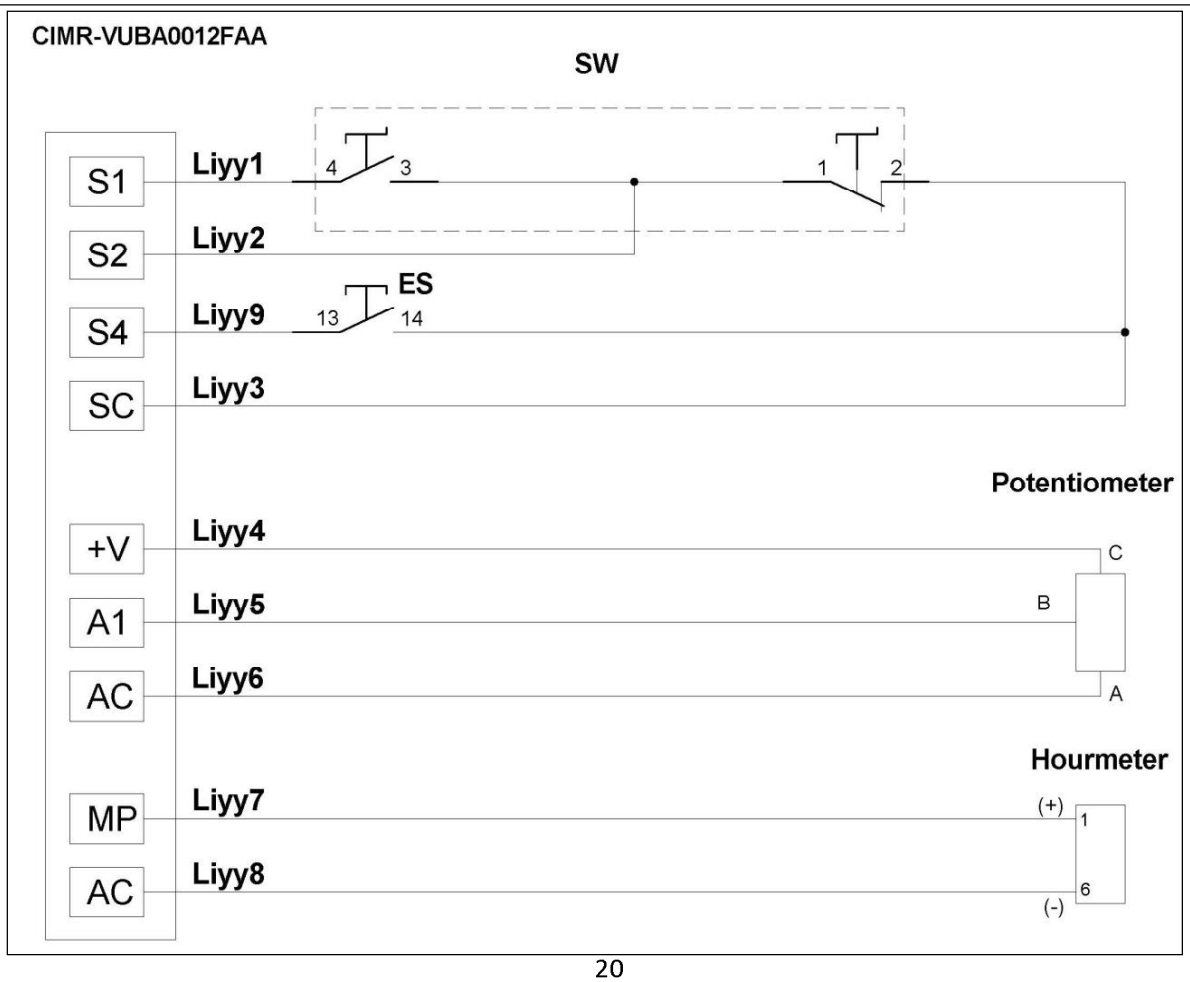
CIMR-VUBA0012FAA
SW
S1
S2
S4
SC
+V
A1
AC
MP
AC
Liyy1
Liyy2
Liyy9
Liyy3
Liyy4
Liyy5
Liyy6
Liyy7
Liyy8
ES
Potentiometer
Hourmeter
(+)
(-)

8. TROUBLESHOOTING

8.1 SEPARATING THE HEAD FROM THE CARRIAGE

To separate the head, start by removing the vacuum connection. Pull up and towards the front of the machine [1], (Fig.8.1).Disconnect the electric motor power connection by lifting up the metal locking clip and pulling toward the front of the machine [2]. Pull out the safety clips and then remove the pins [3] connecting the head to the carriage. Lift up the metal locking clips [4]. With everything disconnected, pull back the carriage to separate it from the head and set it aside [5].

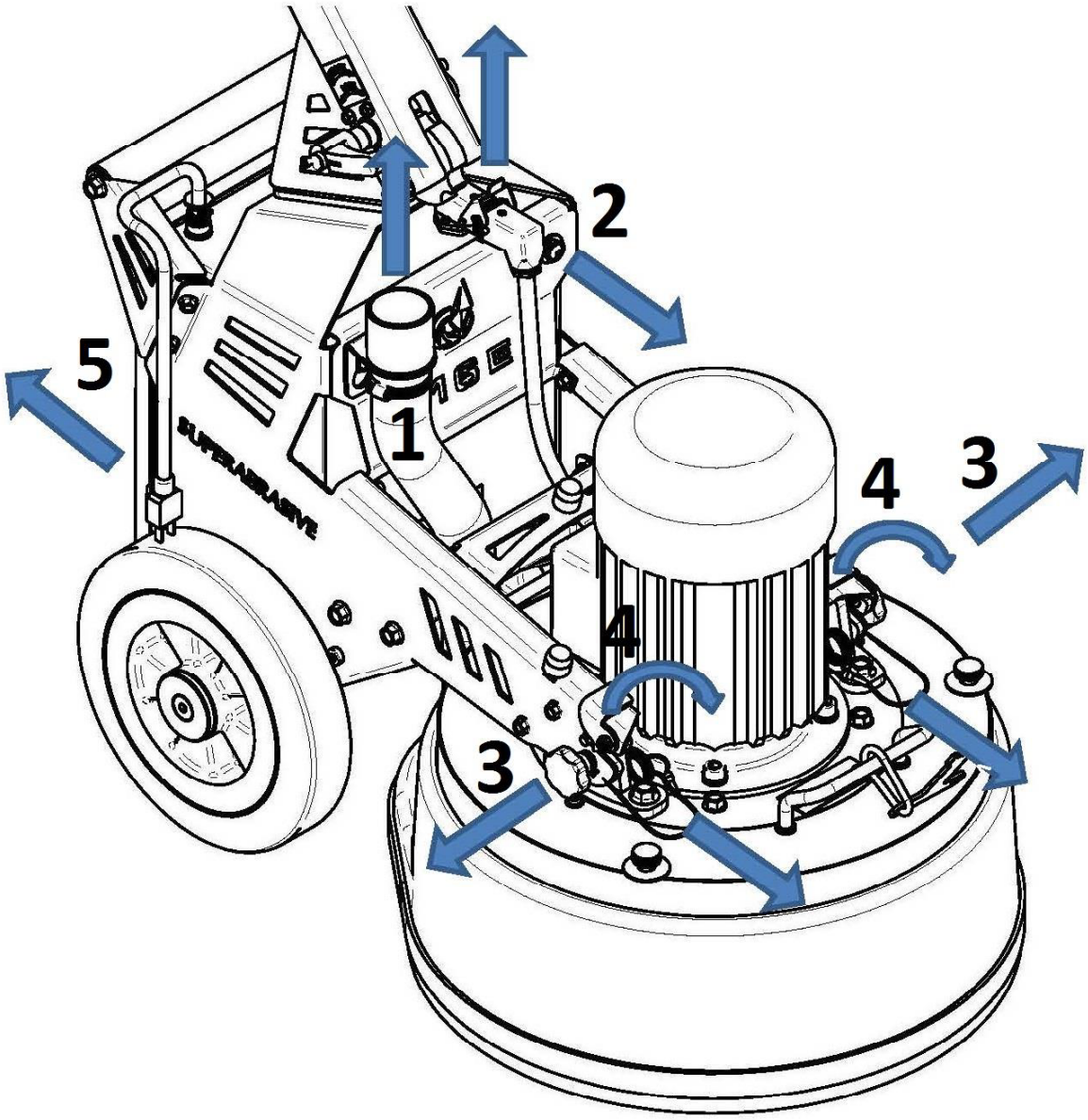

Figure 8.1

8.2 DISMOUNTING/MOUNTING THE GUARD

To remove the guard begin by separating the head from the carriage (sec. 8.1). Once separated:

[1] Remove the 2 knob screws shown (Fig.8.2).
[2] Lift up the guard assembly to remove it and set it aside.

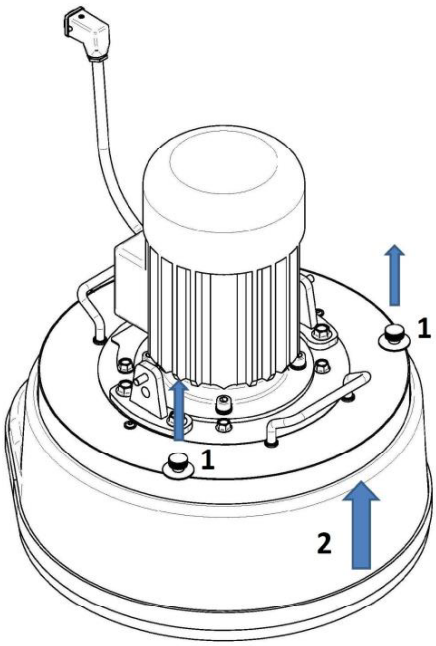

Figure 8.2

8.3 REPLACING POWER CORD AND PLUGS

When replacing the power cord or plugs, always use cords and plugs with specifications as the original ones.

Never use lower quality or different type cord and plugs.
In addition, take into consideration the distance of the appliance from the electrical source. The greater the distance, the greater the resistance and the less current that will be available at the other end; there will be a voltage drop and the inverter will sign alarm mode. This can also happen if several machines are working on the same line or when the generator is underrated. In general our standard power cable can be doubled in length; if longer lengths are needed you have to replace all the cables with bigger gage rated cables for the length and amperage.

8.4 DISMOUNTING AND MOUNTING THE TOOL HOLDER TO CHANGING V-RINGS AND FELT-RINGS

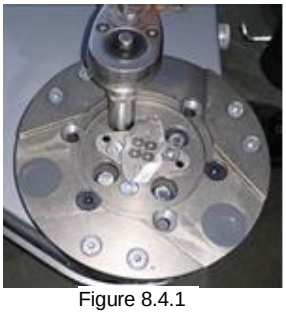
Figure 8.4.1

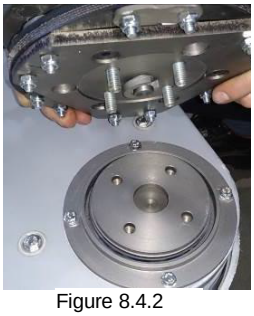
Figure 8.4.2

Figure 8.4.3

Figure 8.4.4

Figure 8.4.5

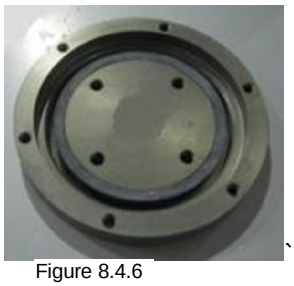
Figure 8.4.6

Figure 8.4.7

To check or replace the buffers and the elastic elements, the tool holders have to be dismounted.
You will need a 13mm deep metric socket with an outside diameter of no more than 3/4in to unscrew the four bolts (Fig.8.4.1) and remove the holder (Fig.8.4.2) When the tool holder is dismounted, you can change the sealers (V-Ring and Felt-Ring).
By loosening four Hex cap flange bolts (Fig.8.4.3) the adaptor comes loose. Unscrew the six screws of the cap (Fig.8.4.4) holding the felt-ring. Take out the Felt-Ring, adaptor and V-Ring.
Mount the V-Ring with the smallest lip of the V to the inside (Fig.8.4.5) - simply push the V-Ring so the top is on the same level as the pulley top (Fig.8.4.6). Then take the adaptor and push the V-Ring down with the adaptor (Fig.8.4.7). The lowest lip of the V-Ring should only barely touch its gliding surface. Mount the adaptor and the Felt-Ring on top (Fig.8.4.7). Always use the original bolts. Do not push the V-ring down with fingers.

8.5 DISASSEMBLING AND MOUNTING THE TOOL HOLDER TO CHANGE BUFFERS AND ELASTIC ELEMENT

When the TOOL HOLDER is disassembled you can change defective parts – elastic element, buffers, etc.

Lift the locking pin (Fig.8.5.1) to dismount the retaining washer (Fig.8.5.2). Take out the screws on the buffers and the nuts of the elastic element (Fig.8.5.3; Fig.8.5.4). Remove the elastic element from the QC plate (Fig.8.5.5). While the holder is dismounted (Fig.8.5.6; Fig.8.5.7), clean the parts and replace the defective with new ones. Assemble the holder with new buffers, screws, and elastic element. Put the retaining washer (Fig.8.5.8) and push the locking pin (Fig.8.5.9). This will prevent the washer from falling while mounting the holder to the machine.

Figure 8.5.1

Figure 8.5.2

Figure 8.5.3

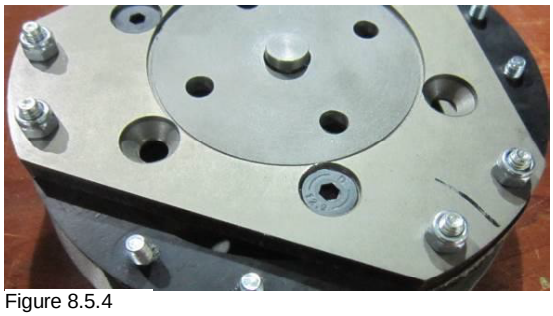
Figure 8.5.4

Figure 8.5.5

Figure 8.5.6

Figure 8.5.7

Figure 8.5.8

Figure 8.5.9

Mount the holder on the machine using the same socket as mentioned in 8.4 (Fig.8.5.10;Fig.8.5.11). The retaining washer fits into the central hole of adaptor and the four bolts into the thread holes. The holder is centered on the outside diameter of the adaptor. Ensure the connection of the holder on the forehead of the adaptor and then tighten evenly the four bolts. Torque on the bolts has to be 22...25 N.m (16...18 lbf.ft). Mounting the holder without retaining washer (Fig.8.5.2) is INADMISSIBLE because the security system preventing the separation of part of the holder in case of broken buffers and elastic element will not function! You can change the butterfly of the holder without dismounting the holder of the machine

Figure 8.5.10

Figure 8.5.11

Fig.8.5.12 is 3-D section view of the holder, showing its parts. The numbering is the same as in Spare parts.

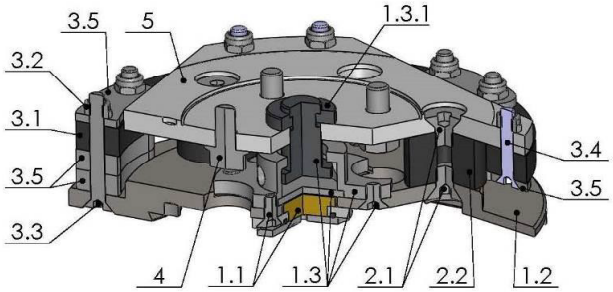

Figure 8.5.12

8.6 TENSIONING A USED PLANETARY BELT

If the belt slips or breaks, unscrew the four bolts shown (1) (Fig.8.6.1) and remove top cover (2).

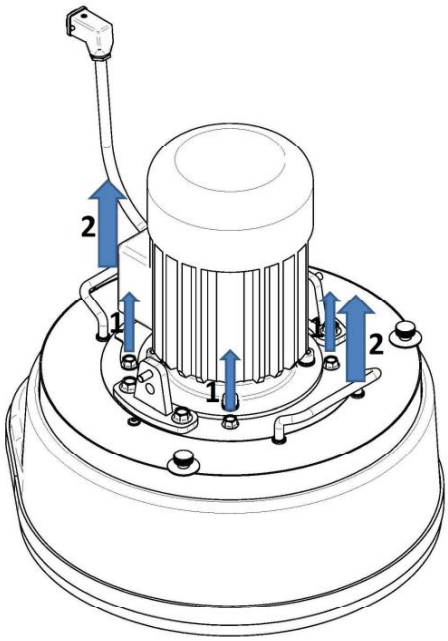

Figure 8.6.1

If the belt only slipped, it can be retightened. Slightly loosen the two bolts (1) (Fig. 8.6.2) and the nut of the tensioner(2) . Unscrew the stop nut(3). Correct the belt tension using nut (4). Fig. 8.6.3 shows where to measure the belt tension with frequency tester Opribelt TT3 . The frequency should be 300 Hz.

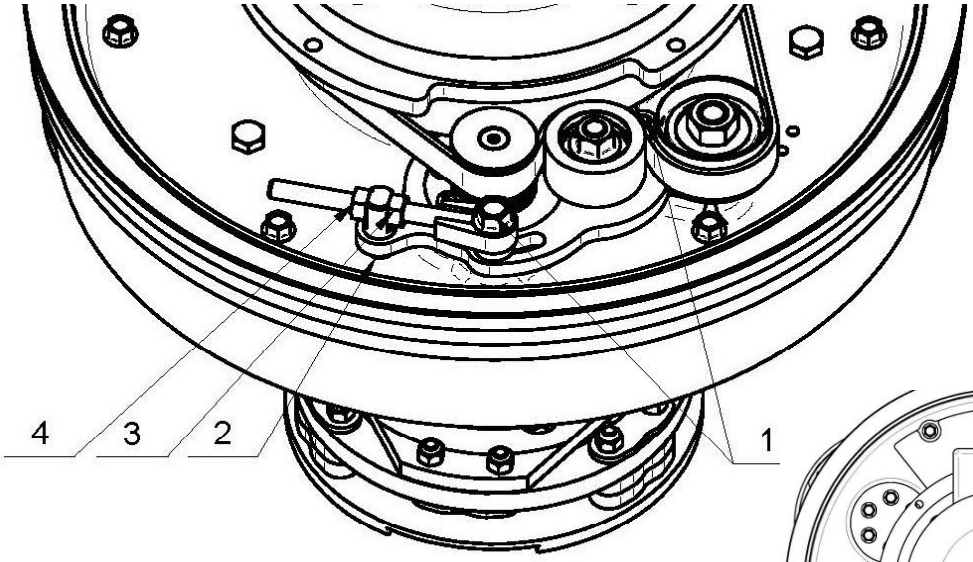

Figure 8.6.2

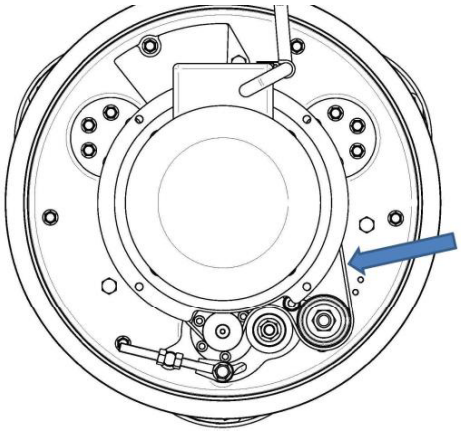

Figure 8.6.3

8.7 MOUNTING AND TENSIONING A NEW PLANETARY BELT

Unscrew the two bolts (pos.1, pos.2 Fig. 8.7.1) and the nut (pos.3) of the tensioner. Unscrew the stop nuts (pos.4 and pos.5) and turn the tensioner (pos.7) to loosen the belt (pos.6). Take off the old belt. Install the new belt, and replace the bolts and nut. Tension to 300 Hz using frequency tester Opribelt TT3. Do not forget to lock the tensioner.

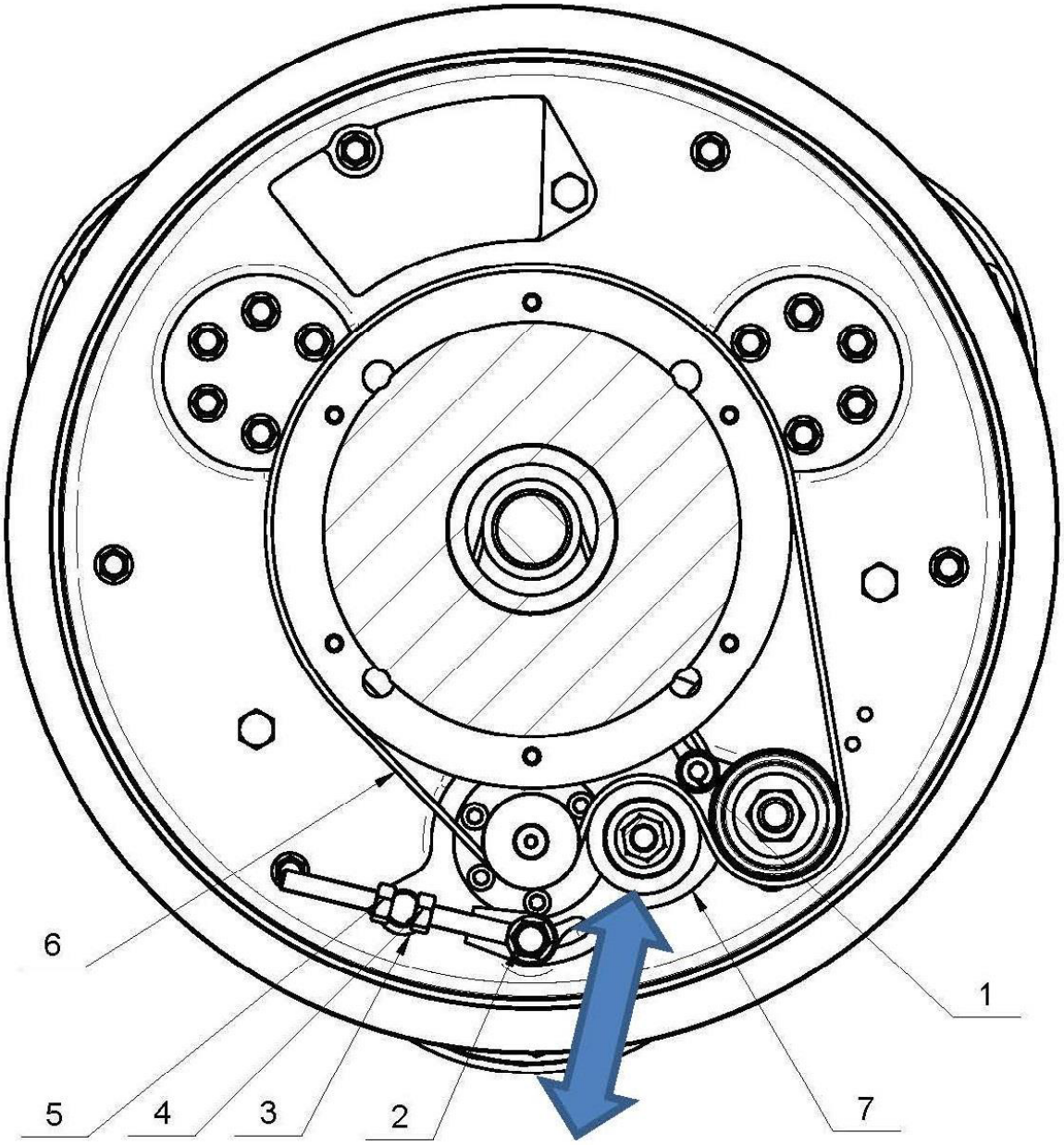

Figure 8.7.1

ATTENTION: NEVER "OVER" TENSION THE BELT, THE BELT WILL BE DAMAGED AND IT WILL NEVER RECOVER ITS ORIGINAL TENSION

8.8 REPLACING PULLEY UNITS

Dismount guard, top cover, bottom cover and belts as described. Dismount the planetary tensioner. (Fig.8.8.1 pos.1).

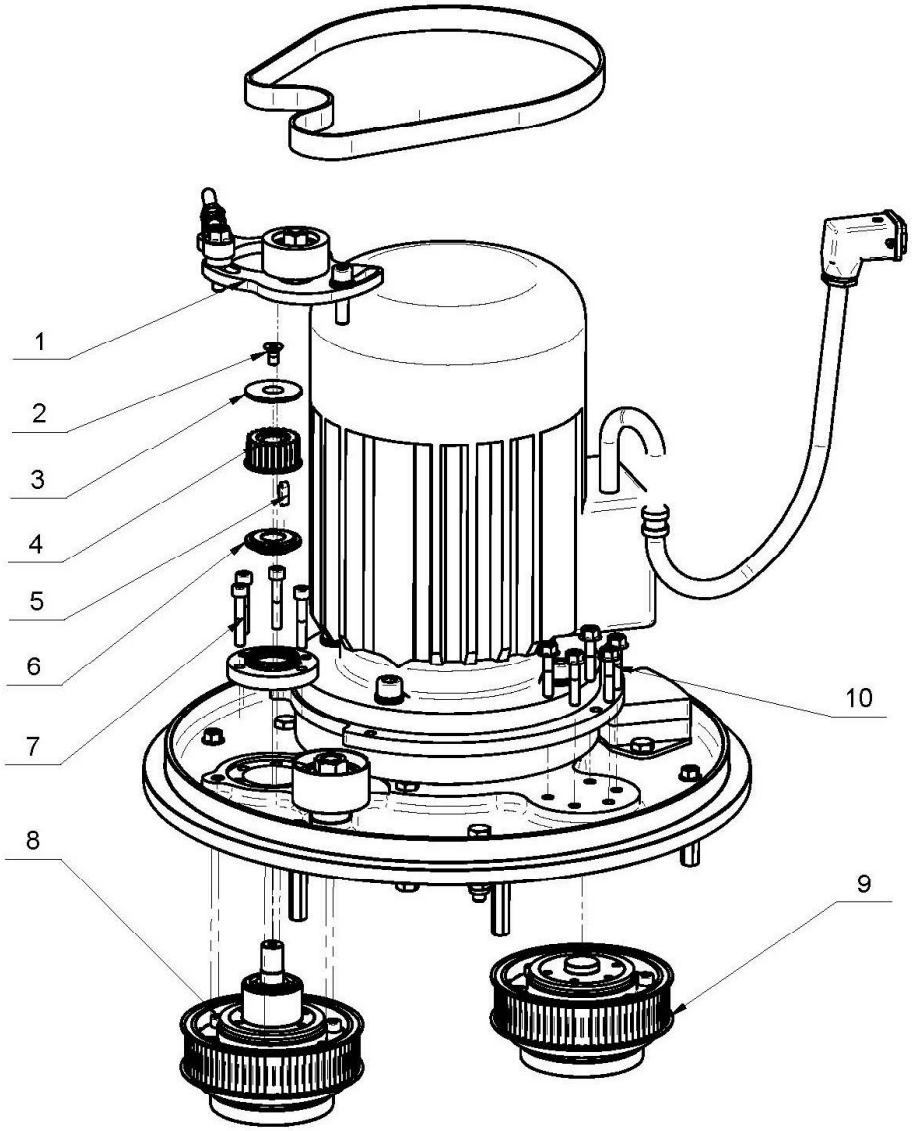

Figure 8.8.1

Unscrew the screw (2) and dismount the front washer (3), the drive pulley of the planetary belt (4), cotter (5) and security cap (6). Unscrew the four screws (7) and dismount the driving pulley (8).
Unscrew the five bolts (10) and dismount the other two units.
While mounting the pulley unit (8), apply lithium grease on the shaft and remount the cotter (5), security cap (6), front washer (3) and guiding washer of the planetary belt (4).
Apply “blue” thread locking adhesive to the screw (2) and tighten to 9...11N.m (6.6...8 lbf.ft). Torque the bolts in position (7) and (10) to 9...11N.m (6.6...8 lbf.ft) as well.

8.9 MOUNTING, CHECKING, TENSIONING AND REPLACING THE MAIN BELT

The transmission of the machine has one timing belt that rotates the three tool holders. To change the belt, remove all holders and adaptors. There will be sealing to remove as well. Carefully check any friction surfaces for wear, and replace if necessary. To remove the bottom cover (pos.1 Fig.8.9.1), unscrew the bolts (pos.2) on the front surface of the cover. While changing belts, it is recommended to change all seals (O-Rings and seal around cover).

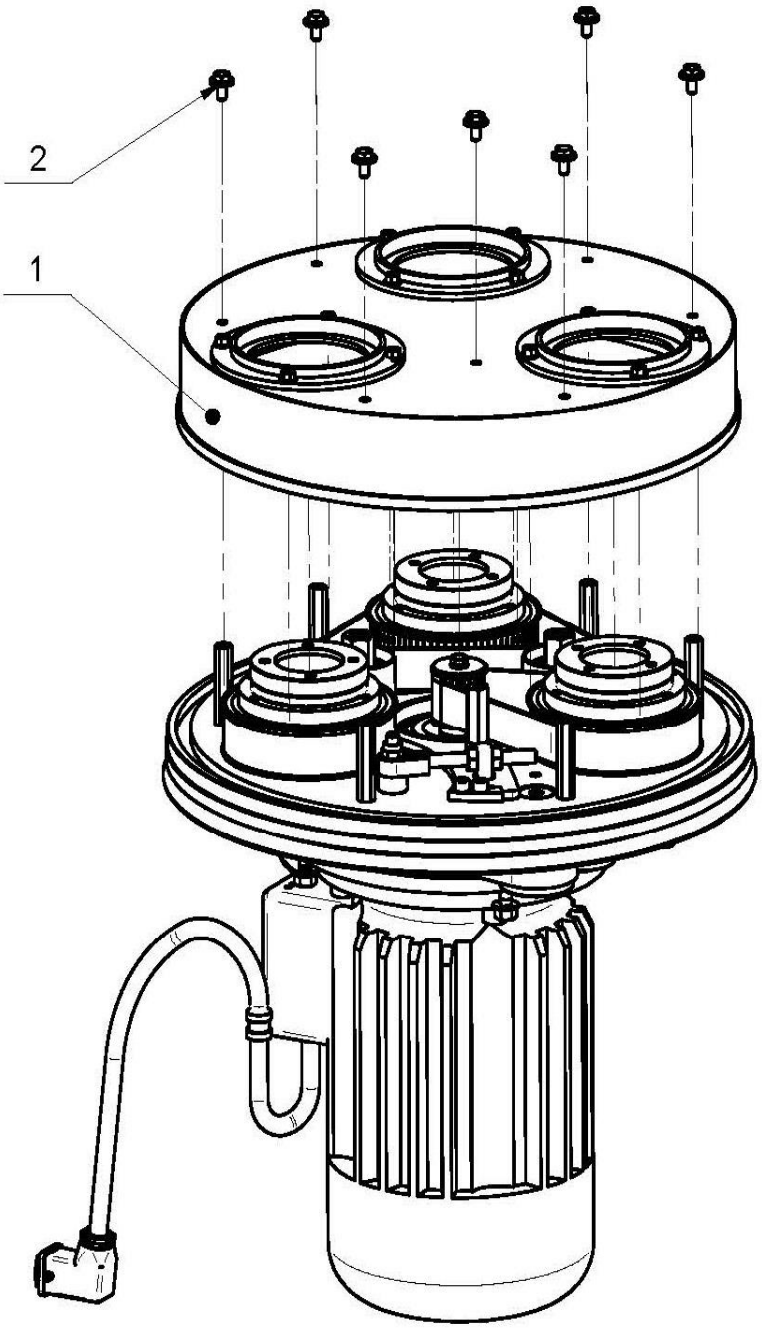

Figure 8.9.1

Fig.8.9.2 shows the diagram of the belt. To remove the belt (1), unscrew the nut (3), the three nuts (2), and the nut (5) such that the tensioner (6) can be turned around the central axle. Clean the washers and surrounding area, and check all bearings of the pulley units and tensioners for too much clearance or rolling noise). Rotating the tensioner will allow the central distance to be reduced in such a way that the timing belt may be fitted without force. Installation with the **use of force is NOT permissible** at any time, as this can damage the high quality, low stretch tension cord and other components. This damage is

often not visible. Put the belt (1) as shown on the diagram below, paying attention to the orientation and connection at every pulley. Loosen nuts (3) and (4) and fully loosen the nuts on the tensioner (2), allowing the rotation of the tensioner with minimal force.
Using nut (3), tighten the belt, verifying again the correct position of the belt, and the correct gearing in every pulley.
Rotate the pulleys while tensioning to allow uniform tension distribution along the entire belt. Measure the tension using a Frequency Tension Tester (Optibelt 3 TT). Tension on the belt should be 290-300Hz, measured in position A.
Tighten the three nuts (2), the nut (5) and the stopping nut (4). Measure again the tension of the belt to ensure nothing has changed. It is possible to use pre-installed support (7) as a reference to stop the tensioner at the desired belt tension, provided that the support has not been moved from its factory position.

ATTENTION: NEVER "OVER" TENSION THE BELT, THE BELT WILL BE DAMAGED AND IT WILL NEVER RECOVER ITS ORIGINAL TENSION

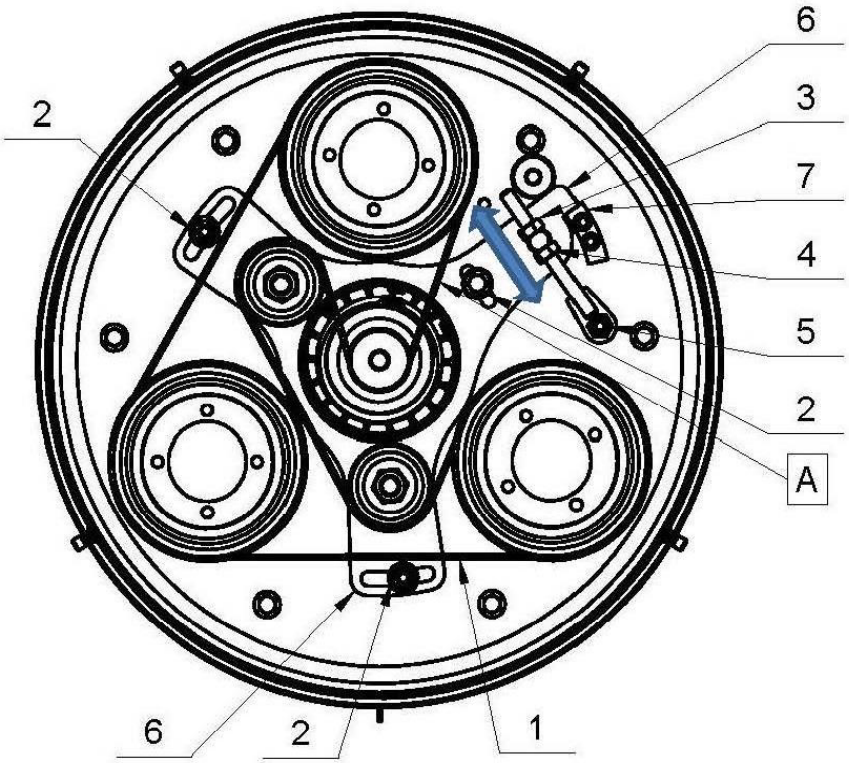

Figure 8.9.2

9. DISPOSAL

If your machine becomes not usable or needs to be replaced after a certain period of time, send the machine back to Superabrasive or a local distributor, where a professional disposal complying with the environment laws and directives is guaranteed.

10. MANUFACTURER'S CONTACTS

If you need to contact Superabrasive Ltd. with technical support questions, below is the contact information.

Address: Superabrasive Ltd.
Rabotnicheska 2A
BG-6140 Krun
Bulgaria

Email: factory@superabrasive.com
Tel.: +359 431 6 44 77
Fax: +359 431 6 44 66
Website: www.superabrasive.com