LAVINA ELITE SERIES

by SUPERABRASIVE

LAVINA ELITE L14EU

User Manual

CE

www.superabrasive.com | info@superabrasive.us

Table of Contents

LAVINA ELITE L14EU 1
WARRANTY AND RETURNS 4
1. GENERAL INFORMATION 5
1.1 MANUFACTURER 5
1.2 ENVIRONMENTAL CONDITIONS 5
1.3 VACUUM CONNECTION 5
1.4 MACHINE DESCRIPTION 5
1.5 LAVINA® L14EU MAIN COMPONENTS 6
1.6 TECHNICAL DATA 7
1.7 VIBRATIONS 7
1.8 CE - CERTIFICATION 7
2. SAFETY INSTRUCTIONS 8
RECOMMENDED USE 8
2.1 PROHIBITED USE 8
2.2 PREPARATION FOR WORK 8
2.3 PROTECTION DEVICES 8
2.4 ARREST FUNCTIONS 8
2.5 SAFE USE 8
2.6 RESIDUAL RISKS 8
2.7 BEFORE YOU BEGIN 9
2.8 OPERATING MACHINE 9
2.9 AFTER WORK IS COMPLETED 9
2.10 THE WORK AREA 9
2.11 PERSONAL PROTECTION EQUIPMENT (PPE) 9
2.12 OPERATOR 9
3. HANDLING AND TRANSPORTATION 10
3.1 ADJUSTING THE HANDLEBARS 10
3.2 TOOL MOUNTING POSITION 10
3.3 TRANSPORT POSITION 11
3.4 STORAGE 12
4. OPERATION 13
4.1 PRELIMINERY CONTROLS 13
4.1 VACUUM CONNECTION 13
4.2 CONTROL PANEL 13
4.3 TOOL MOUNTING 14
4.3 STARTING THE MACHINE 14
4.4 OPERATING THE MACHINE 15
4.5 STOPING THE MACHINE 15

5. TOOLS 16
6. POPULAR TOOLS 17
7. MAINTENANCE AND INSPECTION 18
7.1 CLEANING 18
7.2 CHECK DAILY 18
7.3 CHECK AND REPLACE EVERY 200 WORKING HOURS 18
7.4 ELECTRICAL SYSTEM DIAGRAMS 19
8. TROUBLESHOOTING 21
8.1 REPLACING THE POWER CORD AND PLUGS 21
8.2 MOUNING AND DISMOUNTING THE GUARD 21
8.3 TOOL HOLDER – DISSASEMBLY, REPLACEMENT OF ELASTIC ELEMENT AND BUFFERS 22
9. DISPOSAL 23
10. MANUFACTURER'S CONTACTS 23

WARRANTY AND RETURNS

WARRANTY POLICY FOR LAVINA® ELITE MACHINES

A warranty card must be submitted to Superabrasive within 30 days of purchase in order for the foregoing warranty to apply.

You can either mail a hard copy of the warranty card or submit it electronically - see page 2.
Superabrasive warrants, from the time of delivery and receipt by the original customer, new and unused products sold by Superabrasive or Superabrasive-appointed distributors or dealers. Goods shall be free from defects in materials and workmanship. Superabrasive or a Superabrasive-appointed repair facility shall either replace or repair any defects in the Goods resulting from faulty design, materials, or workmanship. Products repaired or replaced during the warranty period shall be covered by the foregoing warranty for the remainder of the original warranty period, or ninety (90) days from date of the repair or shipment of the replacement, whichever is longer. Spare parts for repair will be either new or equivalent to new.

Warranty period shall be 2 years from the time of delivery and receipt by the original customer, or 600 operating hours on the machine - whichever occurs first. Superabrasive will cover the shipping charges for the transportation of the machine to Superabrasive (or an approved repair facility) and back to the customer (within the contiguous 48 United States) in the event that the damage occurs and is reported within 200 operating hours. Shipping charges, if covered by Superabrasive, must be agreed upon in advance and approved by Superabrasive. Thereafter, the customer will have to cover the shipping charges to Superabrasive and back. Superabrasive will not warranty Goods after a period of 2 years from the time of delivery and receipt by the original customer, or 600 operating hours on the machine - whichever occurs first.
Superabrasive shall not be liable for any defects that are caused by circumstances that occur after the Goods have been delivered and whilst the Goods are in the possession of the purchaser. Furthermore, the warranty does not include normal wear and tear or deterioration. Wear parts are not warranted. Superabrasive is not liable for defects arising out of use of non-OEM parts.
The Warranty is void if the purchaser has not followed the maintenance plan stipulated by the machine's manual and warranty card. The warranty is void if the purchaser repairs said Goods himself, or if repairs are conducted by a repair facility that is not approved by Superabrasive. Superabrasive's liability does not cover defects which are caused by faulty maintenance, incorrect operation, faulty repair by the purchaser, or by alterations conducted without Superabrasive's prior written consent. The same applies to any alterations of the Goods or services performed by another party other than Superabrasive, a Superabrasive-appointed distributor, or a Superabrasive-approved repair facility. The warranty is not applicable on a defect that arises due to tools or parts that are not original to Superabrasive. Replaced defective parts shall be placed at Superabrasive's disposal and shall become property of Superabrasive. If such defective parts are replaced within the warranty period, the shipping charges will be covered by Superabrasive. In warranty complaint cases, when no defects are found for which Superabrasive is liable, Superabrasive shall be entitled to compensation for the labor, material cost, and shipping charges, incurred by Superabrasive as as a result of the complaint.
The warranty herein is non-transferable, and only applies to the original owner or purchaser of the machine.

RETURN POLICY FOR LAVINA® ELITE MACHINES

The Lavina® ELITE machines may be returned, subject to the following terms:
In no case, a machine is to be returned to Superabrasive Inc. for credit or repair without prior authorization. Please contact Superabrasive Inc. or your local distributor for an authorization and issuance of a return authorization number. This number along with the serial number of the machine must be included on all packages and correspondence. Machines returned without prior authorization will remain property of the sender and Superabrasive Inc. will not be responsible for them. No machines will be credited after 90 days from the date of invoice.

All returns must be shipped freight prepaid. Returned machines may be exchanged for other equipment or parts of equal dollar value. If machines are not exchanged, they are subject to a fifteen percent (15%) restocking fee.

1. GENERAL INFORMATION

This owner's manual is intended for the operator of the Lavina® ELITE machine, the servicing technician as well as for anyone involved with operating or servicing the machine. We recommend that you read the instructions very carefully and follow them strictly. The manual includes information about assembling, using, handling, adjusting and maintaining your Lavina® ELITE floor grinding and polishing machine.

1.1 MANUFACTURER

Superabrasive was founded in 1987, as a manufacturer of high quality diamond tools for the stone and concrete industry. Today, Superabrasive is one of the world's leading companies in the production of diamond tools and floor grinding machinery. At Superabrasive, we strive to deliver the very best solutions to our customers, and enable them to work more efficiently.

1.2 ENVIRONMENTAL CONDITIONS

The temperature range for operating the Lavina® ELITE machine outdoors is between 41°F and 86°F or 5°C and 30°C. Never use the Lavina® ELITE machine during rain or snow when working outdoors. When working indoors, always operate the machine in well- ventilated areas.

1.3 VACUUM CONNECTION

A connection for a vacuum dust extractor is located on the carriage. The Lavina® ELITE machine does not include a vacuum dust extractor. The customer must purchase the vacuum dust extractor separately. The vacuum dust extractor must be adapted for floor grinders and have a minimum air displacement of 310 m^3/h with a negative vacuum of 21 kPa.

1.4 MACHINE DESCRIPTION

The Lavina® 14 ELITE machine is a single-disc, variable speed machine intended for use in small or difficult to maneuver spaces. It can be used for grinding and polishing concrete, marble, granite, limestone and terrazzo surfaces with diamond tools. Additionally, the machine could be used for grinding wood floor surfaces.
The handlebars can be moved and fixed to either side, allowing the operator to follow the edge of a wall comfortably. The L14EU can grind/polish as close as 20 mm to the edge. It is very light and easy to transport, and thanks to its foldable frame design, can be disassembled and loaded in the back of a compact car or SUV in minutes.

For best results, use only tools manufactured or recommended by Superabrasive and its distributors.

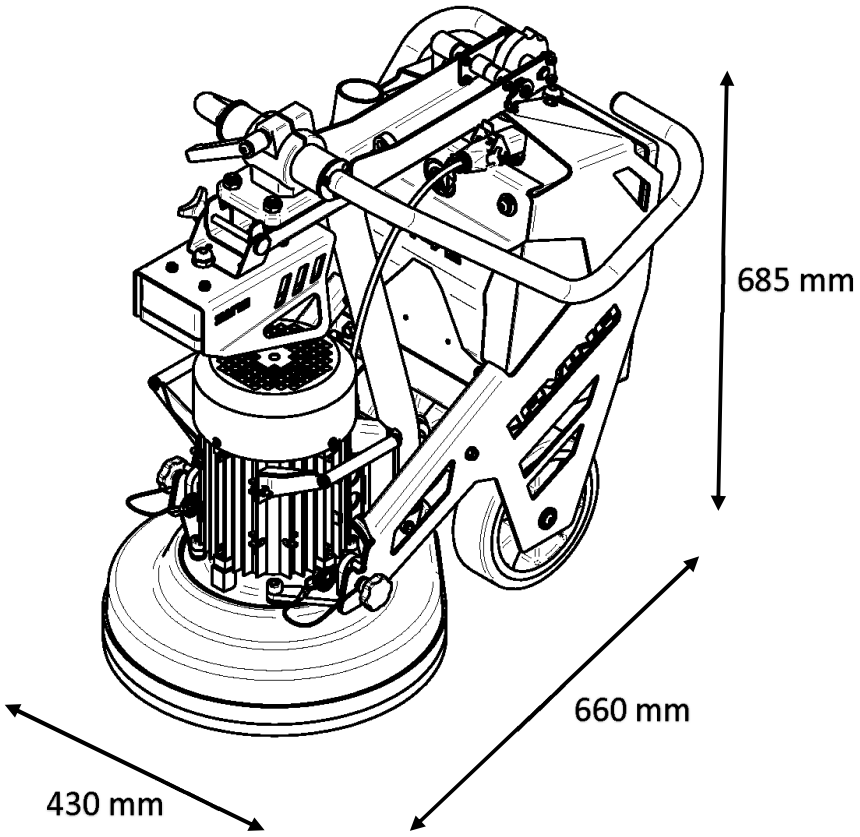

⚠ WARNING

The Lavina® ELITE machine is manufactured and fitted for the above-mentioned applications only! Every other use may possess risks to the persons involved.

1.5 LAVINA® L14EU MAIN COMPONENTS

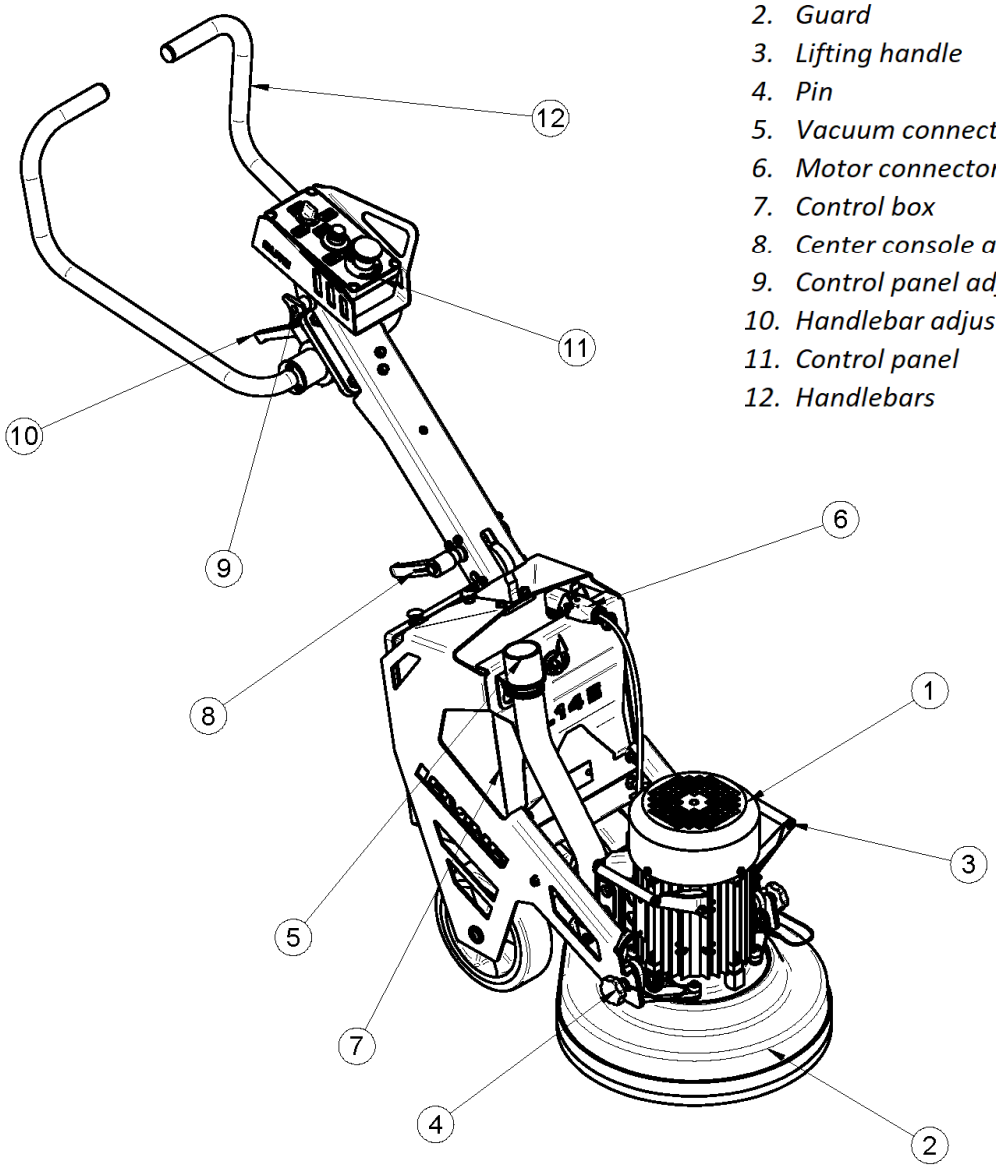

1. *Electric motor*
2. *Guard*
3. *Lifting handle*
4. *Pin*
5. *Vacuum connection*
6. *Motor connector*
7. *Control box*
8. *Center console adjusment handle*
9. *Control panel adjusment knob*
10. *Handlebar adjusment handle*
11. *Control panel*
12. *Handlebars*

1.6 TECHNICAL DATA

Lavina® 14EU		
Voltage/Hz	1 ph x 200-240V 50-60Hz	
Amperage	Max 12 Amps	
Power	2.2 kW	3 HP
Tool holder rpm	400-1000 rpm	
Working width	335 mm	13.2”
Tool diameter (QC Plate)	1 x 335 mm	1 x 13.2”
Weight	63 kg	139 lbs
Grinding pressure	27 kg	60 lbs
Application	wet and dry	
Vacuum hose port	Φ 50,8 mm	2”
Machine LxWxH	1185x373x1000 mm	46.6x14.7x39.4”

1.7 VIBRATIONS

The vibrations of the machine are within the limits of directives and harmonized standards from the European Union when the Lavina® ELITE is operated with the recommended tools and in normal conditions.

SONOROUS EMISSIONS

The sonorous emissions are within the limits of directives and harmonized standards from the European Union when the Lavina® ELITE is operated with the recommended tools and in normal conditions. However, as previously stated, the operator must wear ear protectors.

LABEL DATA

The data on the label provides the correct Voltage and kW (needed for operational purposes); Weight (needed for transportation purposes); production year and serial number (needed for maintenance purposes).

CUSTOMER SERVICE

For customer assistance and technical support call your local distributor or call Superabrasive Inc. at 1-800-987-8403 or visit us at: www.superabrasive.com, where you can download a copy of this manual.

1.8 CE - CERTIFICATION

The Lavina® ELITE machine is designed to operate correctly in an electromagnetic atmosphere of industrial type and is equipped with all the mechanical and electrical safety protections in conformity with the following European CEE rules and regulations:

The Lavina® ELITE machine complies with the Safety Directive for machines 2006/42/EC, the EMC Directive 2004/108/EC and the Low Voltage Directive 2006/95/EC.

Also complies with the norms in use BDS EN ISO 12100, BDS EN 13862,BDS EN ISO 13857, BDS EN 349, BDS EN ISO 13850,BDS EN 13732-1, BDS EN 953, BDS EN ISO 13849-1,BDS EN 1037, BDS EN ISO 5349-1, BDS EN ISO 11201, BDS EN ISO 3744, BDS EN 1033:2002, BDS EN 60204-1,BDS EN 1837, BDS EN 61000-6-4, BDS EN 61000-6-2, BDS EN 61000-4-2, BDS EN 61000-4-4, BDS EN 61000-4-5,BDS EN 61000-4-11, BDS EN 55016-2-1.

The machine is delivered with the CE mark exposed and provided with an EC declaration of conformity.

2. SAFETY INSTRUCTIONS

RECOMMENDED USE

The LAVINA® ELITE machine is designed and manufactured to grind and polish concrete, terrazzo, and natural stone floors. It can be used for renovations as well as for polishing. The machine is designed for dry or wet use. When using it dry, use a vacuum of appropriate size. For more information, please refer to the chapter on handling the vacuum connection.

⚠ WARNING

2.1 PROHIBITED USE

The machine MUST NOT be used:

For applications different from the ones stated in the General Description chapter.
For not-suitable materials.
In environments which: Possess risks of explosion
Possess high concentration of powders or oil substances in the air
Possess risks of fire
Feature inclement conditions. Possess electromagnetic radiation.

⚠ WARNING

2.2 PREPARATION FOR WORK

Make sure that you have closed the work area, so that no person unfamiliar with operating the machine can enter the area. The tool plate and tools are adjusted to the machine properly. There are no missing parts of the machine.
The machine is in upright working position. The protection devices are working properly. The electrical cable is free move and follow the machine easily. In order to keep the electrical cable from being damaged, no vehicle should cross the zone where electrical cables are situated.

⚠ WARNING

2.3 PROTECTION DEVICES

The machine is equipped with several protection devices including the following:
An emergency stop button
A protection skirt and hood for protecting the tool plates.
These devices protect the operator and/or other persons from potential injuries. Do not remove them. On contrary, before using the machine, please ensure that all protection devices are mounted and function properly. The Security plate prevents the QuickChange pads from loosening during use.

⚠ WARNING

2.4 ARREST FUNCTIONS

Functions of arresting the machine are following: Button to stop the motor (category 1)
Emergency button (category 1)

⚠ WARNING

2.5 SAFE USE

The LAVINA® ELITE is designed to eliminate all risks correlated with its use. However, it is not possible to eliminate the risks of an eventual accident with the machine. Unskilled or uninstructed operator may cause correlated residual risks. Such risks are:
Position Risks due to operator's incorrect working position Tangling up Risks due to wearing inappropriate working clothes
Training Risks due to lack of operational training
NOTE: In order to reduce all consequences of the above- mentioned risks, we advise that machine operators follow the instructions in the manual at all times.

⚠ WARNING

2.6 RESIDUAL RISKS

During the normal operating and maintenance cycles, the operator is exposed to few residual risks, which cannot be eliminated due to the nature of the operations.

⚠ WARNING

2.7 BEFORE YOU BEGIN

Working area must be clear from any debris or objects.
A first-time operator must always read the manual and pay attention to all safety instructions.
All electric connections and cables must be inspected for potential damages.
Ground wire system of the power supply must be also inspected. Perform general daily inspections of the machine and inspect the machine before each use.
Always inspect the safety devices: Mount the Security plate for the Quickchange pads.
The emergency break must be clear and working.
The tool protector must be working.
The machine must be clean.
Never operate the machine in the rain!
Confirm that there are no missing parts especially after transportation, repair, or maintenance.
Before filling the water tank with water make sure the machine is not working and the main switch is turned off.
Before turning on the machine make sure that the base is placed on the floor, the machine MUST NOT be in an upright position when turned on!

⚠ WARNING

2.8 OPERATING MACHINE

When operating the LAVINA® E, make certain that there is no one, but you around the machine.
Never leave the machine unattended while working.
The electrical cable must move freely and must be damage-free.
The water hose must move freely and must be damage-free.
Check the floor you will work on to make sure it is not too uneven. If this is the case, it may damage the machine.

⚠ WARNING

2.9 AFTER WORK IS COMPLETED

Clean the machine and its surroundings properly.
Empty and clean the water tank.
Unplug the machine and wind up the electrical cable.
Store the machine in a safe place.

⚠ WARNING

2.10 THE WORK AREA

Make certain that people or vehicles do not enter the work area.
Avoid cables and hoses being in the way. Always check the floor for debris.

⚠ WARNING

2.11 PERSONAL PROTECTION EQUIPMENT (PPE)

Always wear safety shoes when working with the machine. Always wear ear protectors when working with the machine.
All personnel in the immediate work area must wear safety glasses with side shields.
Always wear safety gloves when changing the tools. Always wear clothes suitable for the work environment.

⚠ WARNING

2.12 OPERATOR

The LAVINA® EU machine.
The operator must know the machine's work environment. Only one operator at a time can work with the machine. The operator must be properly trained and well instructed prior operating the machine.
The operator must understand all the instructions in this manual.
The operator must understand and interpret all the drawings and designs in the manual.
The operator must know all sanitation and safety regulations pertaining to the operation of the machine.
The operator must have floor grinding experience.
The operator must know what to do in case of emergency.
The operator must have an adequate technical knowledge and preparation.

3. HANDLING AND TRANSPORTATION

3.1 ADJUSTING THE HANDLEBARS

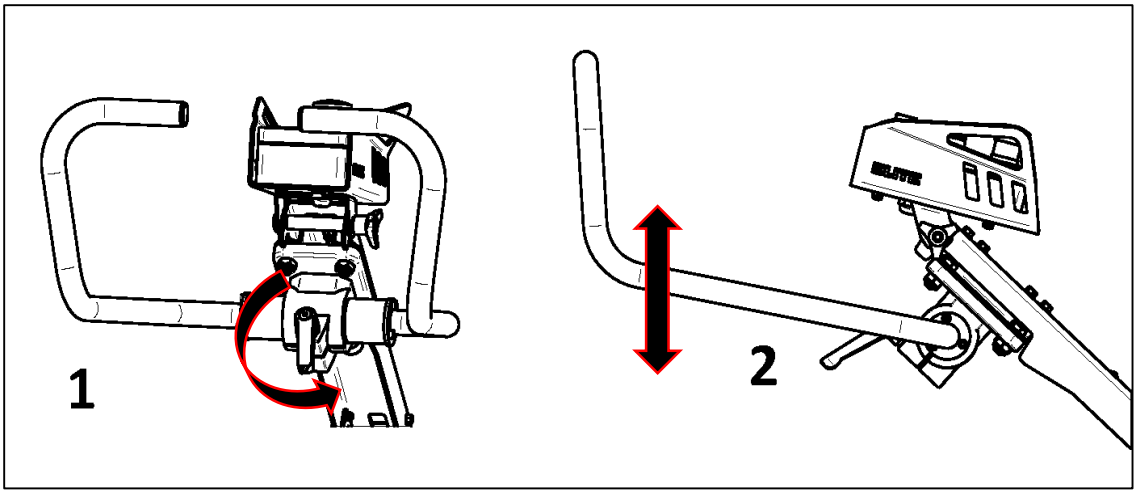

To adjust the handlebars, turn the handlebar adjustment handle counterclockwise to loosen the clamp **[1]**. Position the handlebars in the appropriate position depending on the task **[2]**, and tighten back the clamp by rotating the handle clockwise.

3.2 TOOL MOUNTING POSITION

To mount tools on the machine, begin by turning the center console adjustment handle clockwise to the unlocked position **[1]**. Push up on the handlebars **[2]** until you reach position **[B],** and then turn the center console adjusting handle counter clockwise to lock it in place **[3]**. Set the machine on the floor by letting it rest on the rubber pads on the back of the control box.

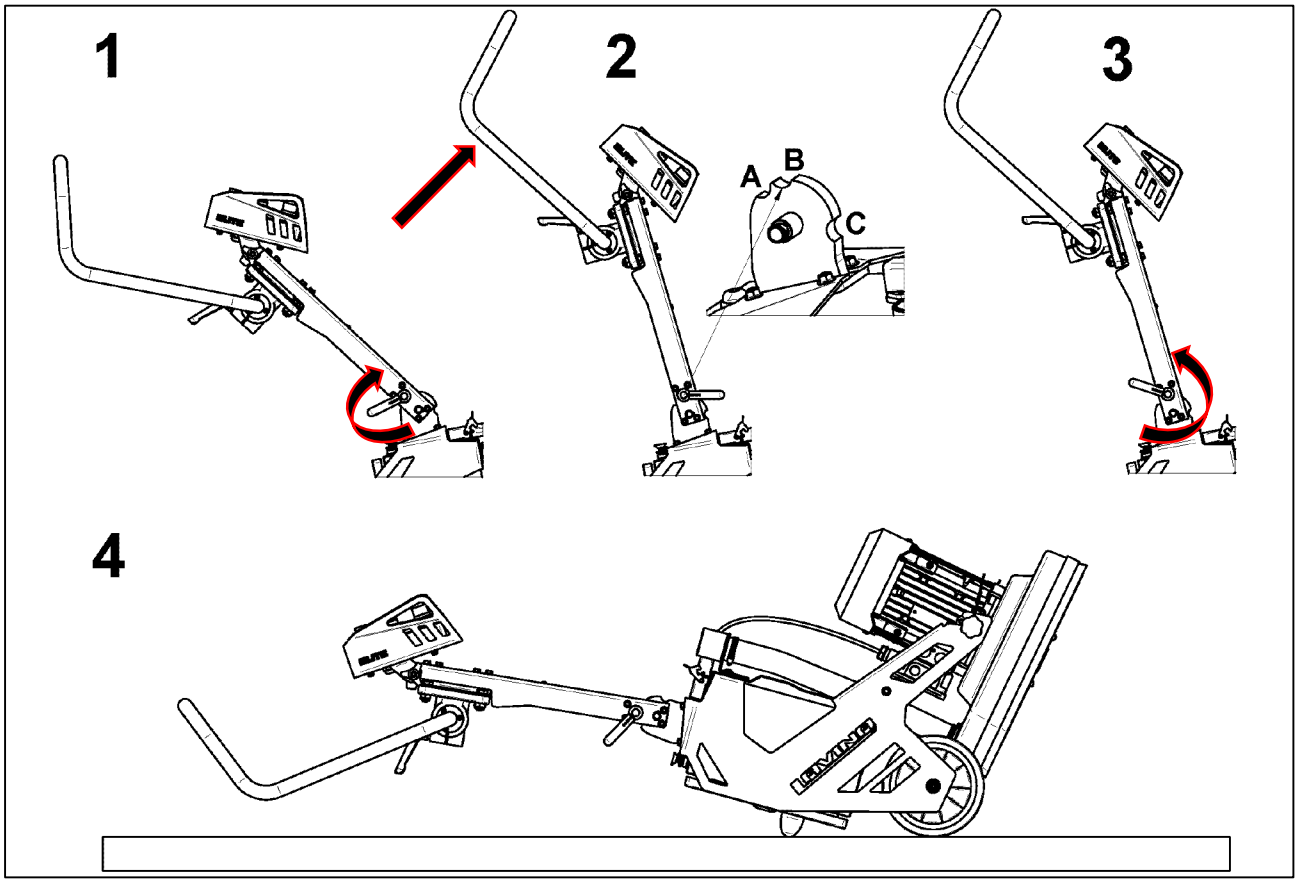

3.3 TRANSPORT POSITION

The Lavina 14EU has the ability to be folded and transported by one person. This can be done with or without the head attached.

SEPARATING THE HEAD

To seperate the head, start by removing the vacuum connection. Pull up and towards the front of the machine **[1]**.Disconnect the electric motor power connection by lifting up the metal locking clip and pulling toward the front of the machine **[2]**. Pull out the safety clips and then remove the pins connecting the head to the carriage **[3]**. With everything disconnected, tilt the machine slightly downward and pull back to remove the carriage **[4]**.

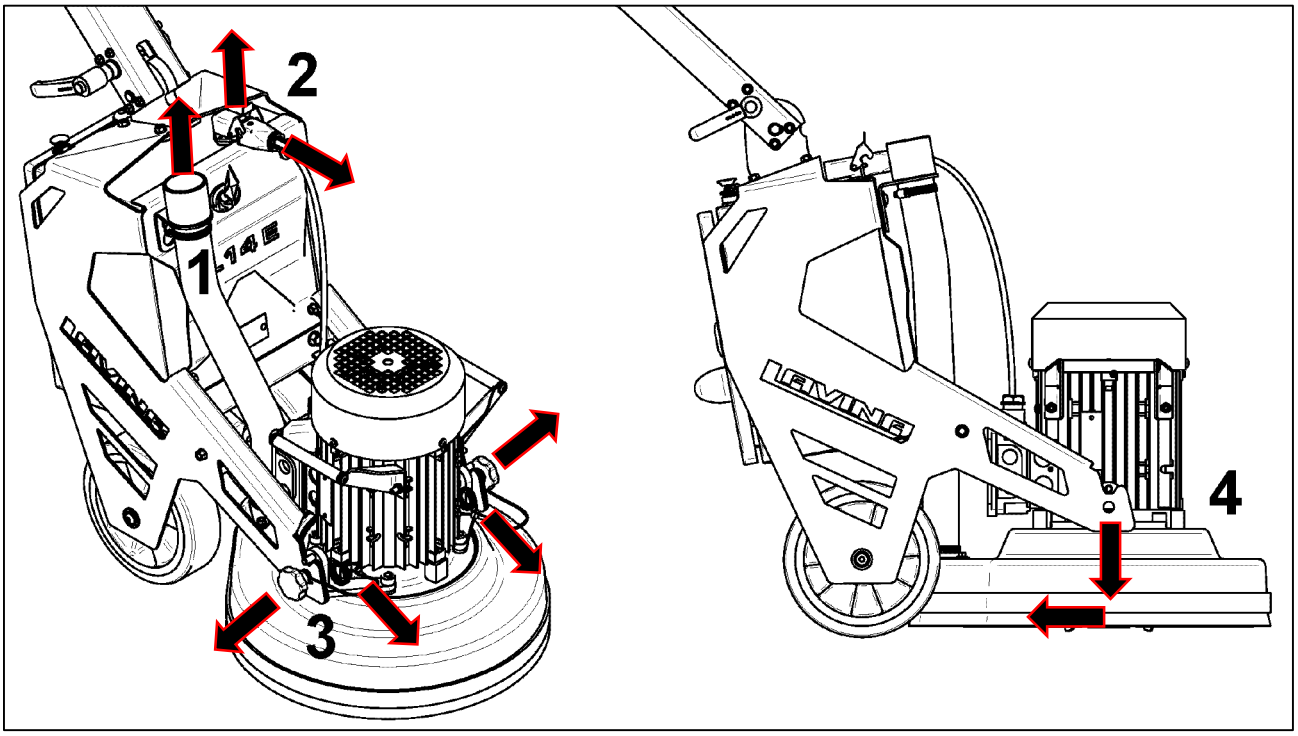

FOLDING THE MACHINE

To fold the machine, turn the center console adjustment handle clockwise to the unlocked position and push up on the handlebars **[1].** Move the center console in position **[C]** and it and lock it place by turning the center console adjusting handle counter clockwise. **[2].**Turn the handlebar adjustment handle counterclockwise to loosen the clamp and move the handlebars back towards the rear of the machine **[3].** With the handlebars positioned as shown, tighten back the clamp by rotating the handle clockwise **[4].**

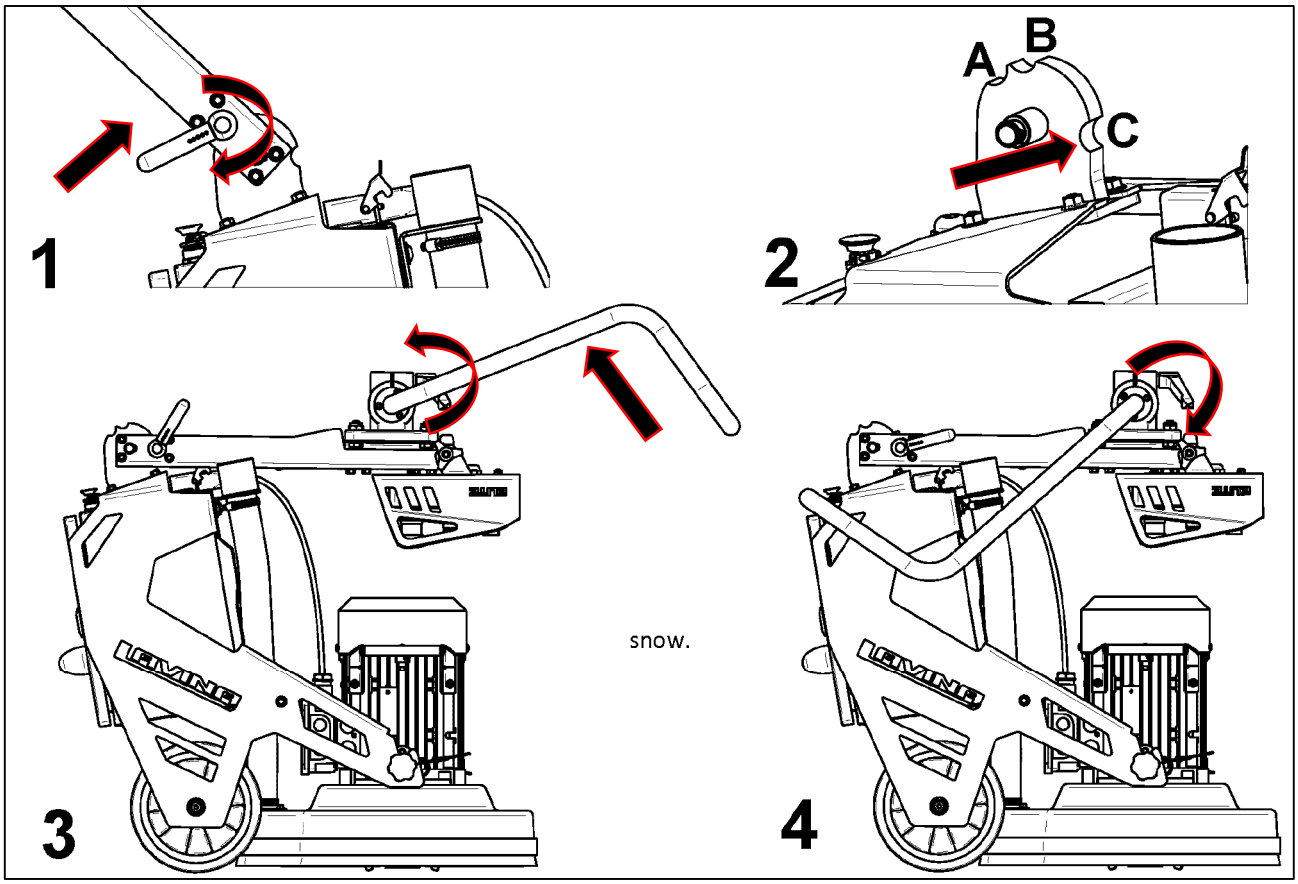

4. OPERATION

4.1 PRELIMINERY CONTROLS

Inspect the working area as explained in the safety instructions. Connect the vacuum extractor and ensure that the vacuum hose is clear and it will follow the machine easily. Make sure that the electrical motor is connected to the power box and then connect the power cable to a power outlet.

4.1 VACUUM CONNECTION

For connection to a dust extractor, the Lavina 14E comes with 2'' vacuum hose port connection that can be placed on either side of the machine as shown.

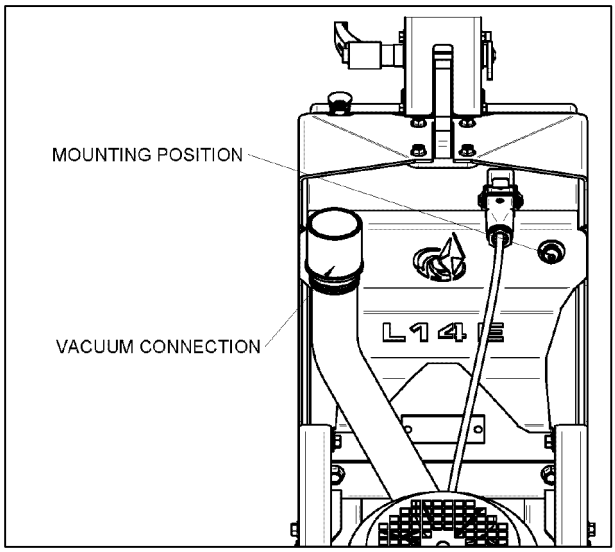

4.2 CONTROL PANEL

1. EMERGENCY STOP BUTTON
– Stops the machine in an emergency situation

2. RPM CONTROL KNOB
– Adjusts the RPM of the tool holder from 400-1000 rpm

3. ON/OFF SWITCH
– Turns ON and OFF the machine during normal operating conditions

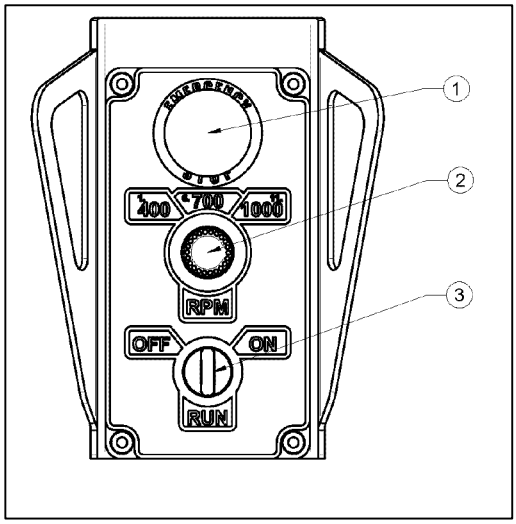

4.3 TOOL MOUNTING

The Lavina® 14EU uses tool holder A64. With this new holder every one of our tools uses the "Quickchange" connection.

To mount tools, begin by unlocking the **butterfly** with the provided **key.** Remove the **security plate** and set it aside. Load the desired tool as shown below, insert the **security plate** and lock it in place again by rotating the **butterfly** with the **key.**
For some new tools, the **security plate** must be removed, as they don't need a locking system. For all others, however, always make sure **the security plate** is installed and tools are securely locked!

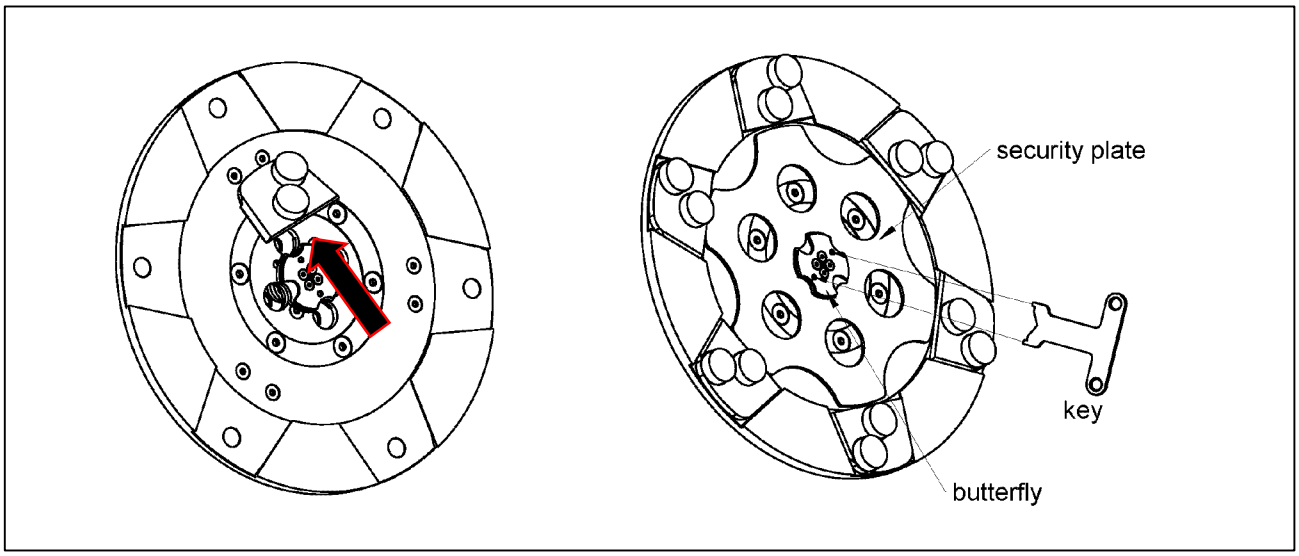

In the Lavina 14E the holder is initially mounted with 6 buffers.
When using the machine primarily around corners and near walls, we recommend keeping the 6 buffers as they make the machine cut much more aggressively. To reduce the aggressiveness with which the machine cuts, remove 3 of the buffers. For more information on buffer installation refer to section 8.3.

WARNING!
Mount tools only after ensuring that there is enough diamond bond material left. Be sure that the plates are always clean before mounting.

4.3 STARTING THE MACHINE

Follow the directions in the chapter on Safety Devices and Safety Instructions.
Coonect the machine to a vacuum unit. Make sure the **EMERGENCY STOP** button is released. Check the **RPM CONTROL KNOB** and ensure that it is set to the desired working speed based on the tools being used. Holding the machine firmly, rotate the **ON/OFF** switch to the right and push down on the handlebars at the same time to start the machine. Pushing down on the handlebars, lifts the head of the machine, helping the machine get up to speed.

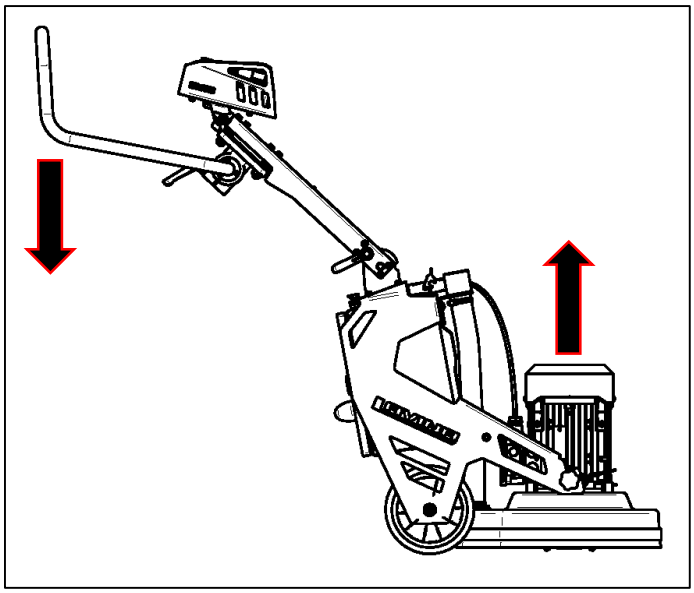

4.4 OPERATING THE MACHINE

Guide the machine in straight lines across the floor, slightly overlapping the previously completed surface with each new line. Work at a constant speed, allowing the tools time to work at a speed appropriate for the tools' grit size. Avoid vibrations. Do not stop the machine while tools are still running as they will mark the surface of the floor. When working dry, check the floor surface periodically for dust accumulation. Check regularly to see if you're vacuum works properly.

The handlebars on the L14E can be moved to either side, in order to aid the operator when working close to a wall.

To move the handlebars turn the handlebar adjustment handle counterclockwise to loosen the clamp and slide the handlebars in the desired direction (left or right). Once adjusted, tighten back the clamp by rotating the handle clockwise.

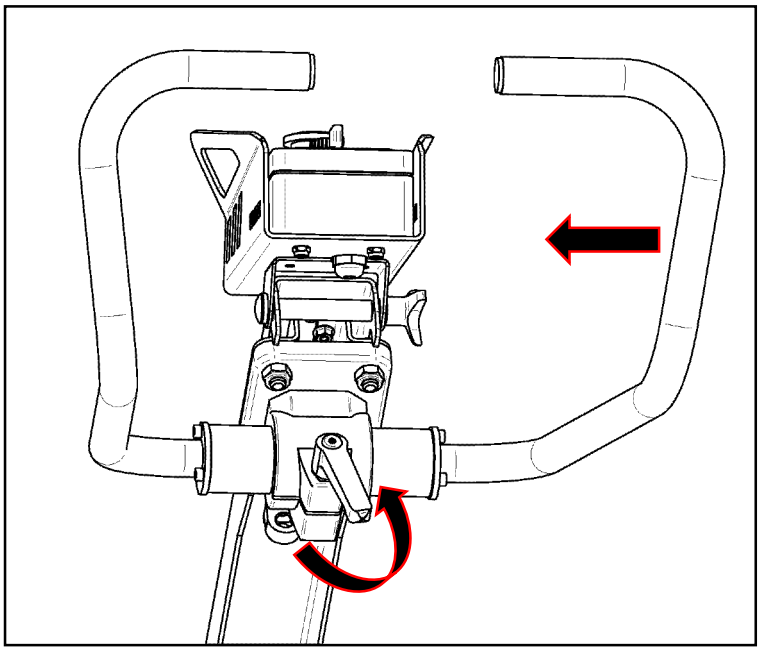

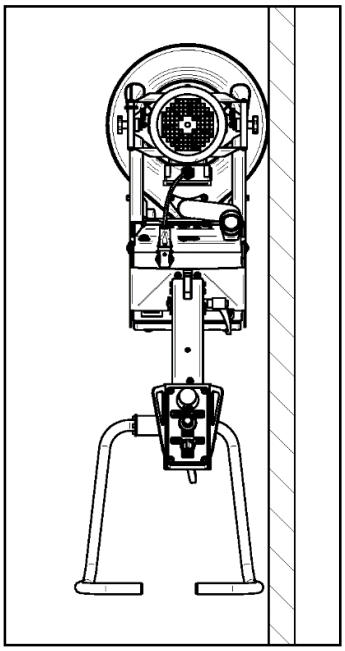

4.5 STOPING THE MACHINE

Stopping of the machine must be done gradually until the motor stops. Do not stop moving the machine before the motor comes to rest, as the tools could damage the surface.
To stop the machine, rotate the **ON/OFF** switch **to the left.**

5. TOOLS

TOOL HOLDER KEY - The tool holder key is used for mounting and dismounting the security plate. Always use the key for mounting.

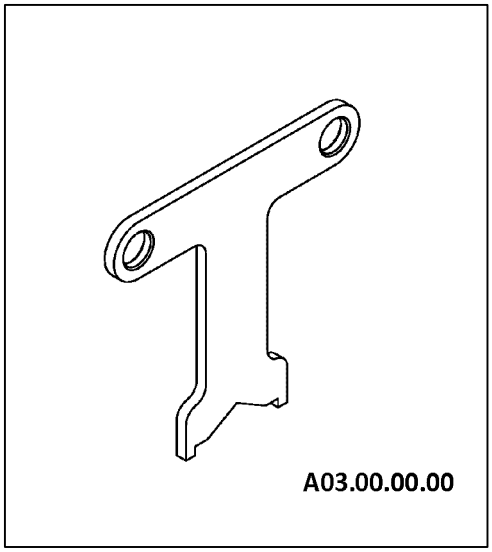

SECURITY PLATE - The Security Plate is used to secure the "Quickchange" tools.

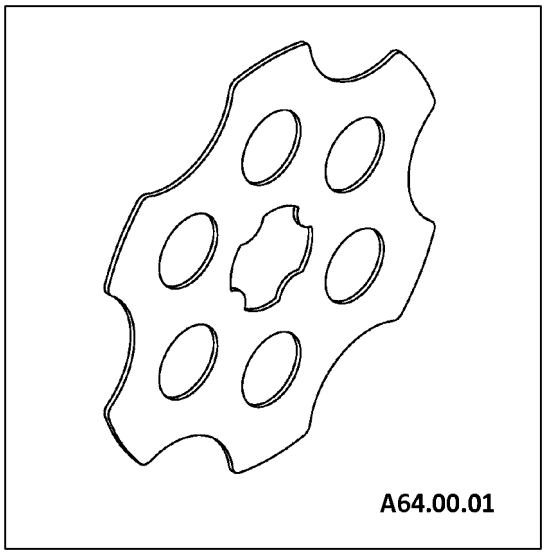

6. POPULAR TOOLS

RECOMMENDED TOOLS

Note: All of our new tools use the "Quickchange" connection as mentioned above.

QuickChange System and Tooling feature extremely fast and convenient tool changes, and a long tool life, providing for great long-term cost savings. The QuickChange pads are produced in four different bonds for super hard, hard, medium and soft concrete, in a variety of grit sizes. They are offered with 1 or 2 buttons or rectangular segments, which allows you to customize the aggressiveness of the cut.

Calibra grinding discs: our popular ceramic bond discs are designed for the removal of difficult scratches and they save you valuable time by eliminating the need for multiple passes with metal tools. They can be used wet or dry, and are best for hard concrete applications.

NATO® polishing discs feature a special resin formula designed for both wet and dry applications and a unique design with wide channels allowing for work on a cleaner surface and ensuring a quality polish.

V-HARR® Premium Polishing Pads are designed for mechanically polishing and restoring concrete; also ideal for terrazzo and hard stone floors. Dry use is strongly recommended.

Use Only Superabrasive's Recommended Tools. For More Tooling Options, Visit **www.superabrasive.com**

7. MAINTENANCE AND INSPECTION

7.1 CLEANING

KEEP YOUR MACHINE CLEAN. Cleaning the machine on a regular basis will help detect and solve potential problems before they cause damage to the machine. Most importantly, check and clean the tool plate connections and vacuum hoses.

7.2 CHECK DAILY

After operating the Lavina® ELITE machine, the operator should conduct a visual inspection of the machine. Any defect should be taken care of immediately. Pay attention to power cords, plugs and vacuum hoses, loose bolt or screws.
Tool holders: Buffers and elastic element are consumables and must be visually checked daily and replaced if needed. See that flanges or discs are mounted and locked well in place. The key lock holders (butterflies) should be also checked.
Check the rubber buffers and fixing of the holders. The flange holding the buffers **[1]** has to be firmly fixed to the unit. A gap seen there means that there are loose screws fixing the holder. The screws have to be tightened immediately for safe operation. Working with loose screws on the holder could also cause bad damages on the machine.
Screws should be torqued to **22-25Nm** (16-18 ft/lbs).
It is very important to regularly check the screws **[2]** that fix the "Quickchange" holder to the safety part, so that the holder does not fly away if the buffers get damaged.

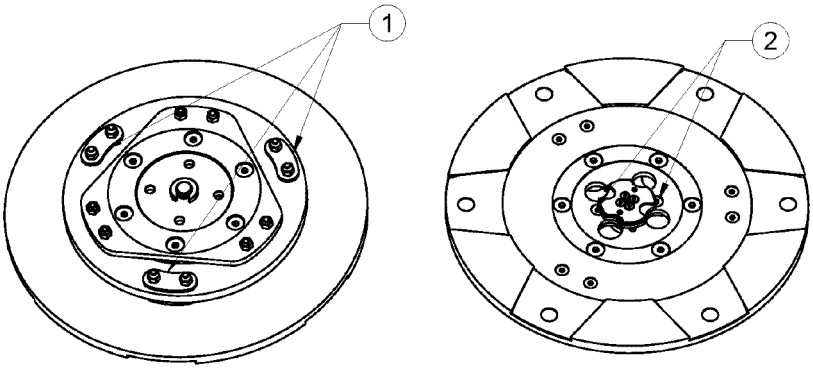

7.3 CHECK AND REPLACE EVERY 200 WORKING HOURS

Every 200 working hours the operator should inspect all parts of the machine carefully. Most importantly, inspect and clean the tool plate connections, vacuum hoses and the guard assembly. Make certain the wheels are clean and rotate properly. Inspect the control buttons. If there are defective control parts, they should be replaced immediately. Replace worn vacuum hoses.
Carefully inspect the bearings of the grinding unit, and replace any showing signs of excessive wear. For more information, refer to chapter troubleshooting below.
Dismount the tool holders (See Troubleshooting) replace all parts (elastic element, buffers, and sealers) with the slightest damage. **Return** machine to **authorized service center** for an overall checkup if necessary.

7.4 ELECTRICAL SYSTEM DIAGRAMS

Dust should not enter the control box, as it will destroy the contacts. Remove (blow out) any dust present.

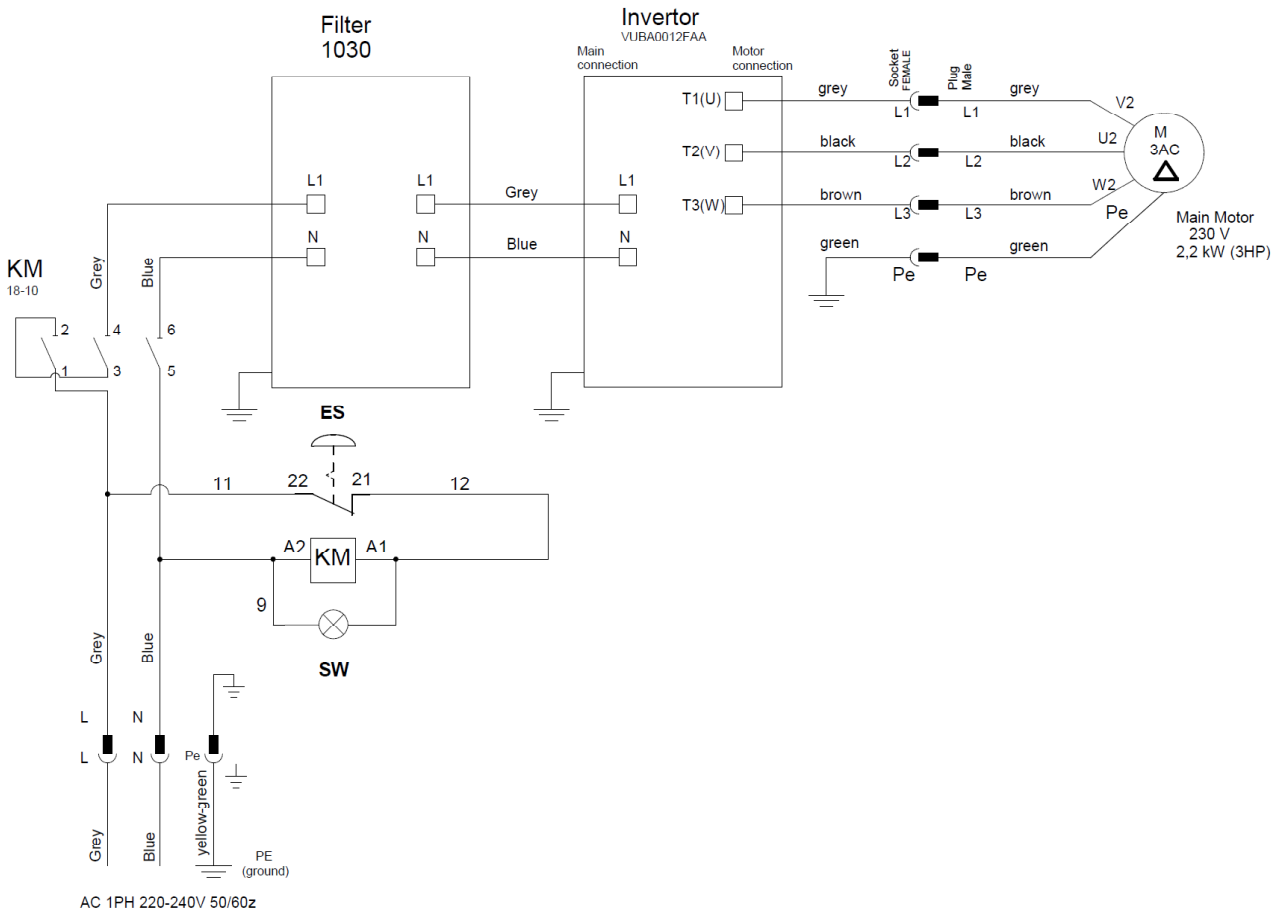

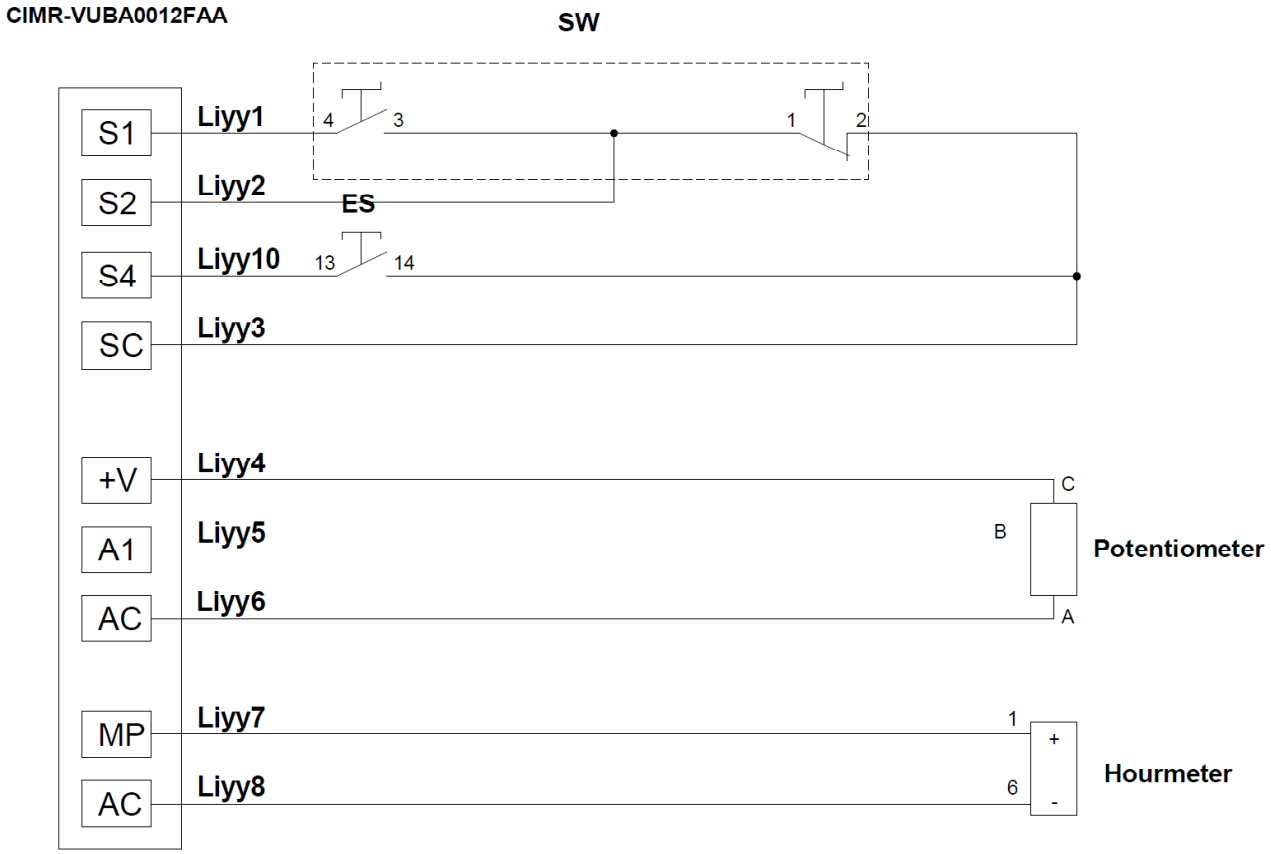
CIMR-VUBA0012FAA
SW
S1
S2
S4
SC
+V
A1
AC
MP
AC
Liyy1
Liyy2
Liyy10
Liyy3
Liyy4
Liyy5
Liyy6
Liyy7
Liyy8
4
3
1
2
ES
13
14
C
B
A
Potentiometer
1
6
+
-
Hourmeter

8. TROUBLESHOOTING

8.1 REPLACING THE POWER CORD AND PLUGS

When replacing the power cord or plugs, always use cords and plugs with specifications as the original ones.
Never use lower quality or different type cord and plugs.
In addition, take into consideration the distance of the appliance from the electrical source. The greater the distance, the greater the resistance and the less current that will be available at the other end; there will be a voltage drop and the inverter will sign alarm mode. This can also happen if several machines are working on the same line or when the generator is underrated. In general our standard power cable can be doubled in length; if longer lengths are needed you have to replace all the cables with bigger gage cables, rated for the length and amperage.

8.2 MOUNING AND DISMOUNTING THE GUARD

To remove the guard begin by separating the head from the carriage (sec. 3.3). Once separated:

[1] Flip the head and place on a suitable surface as shown. Remove the security plate and any present tools (sec. 4.3)
[2] Remove the 4 bolts shown and set aside the tool holder.
[3] Remove the 4 bolts securing the guard support.
[4] Pull up on the guard support to remove it and set it aside. The guard assembly is now free to be removed.

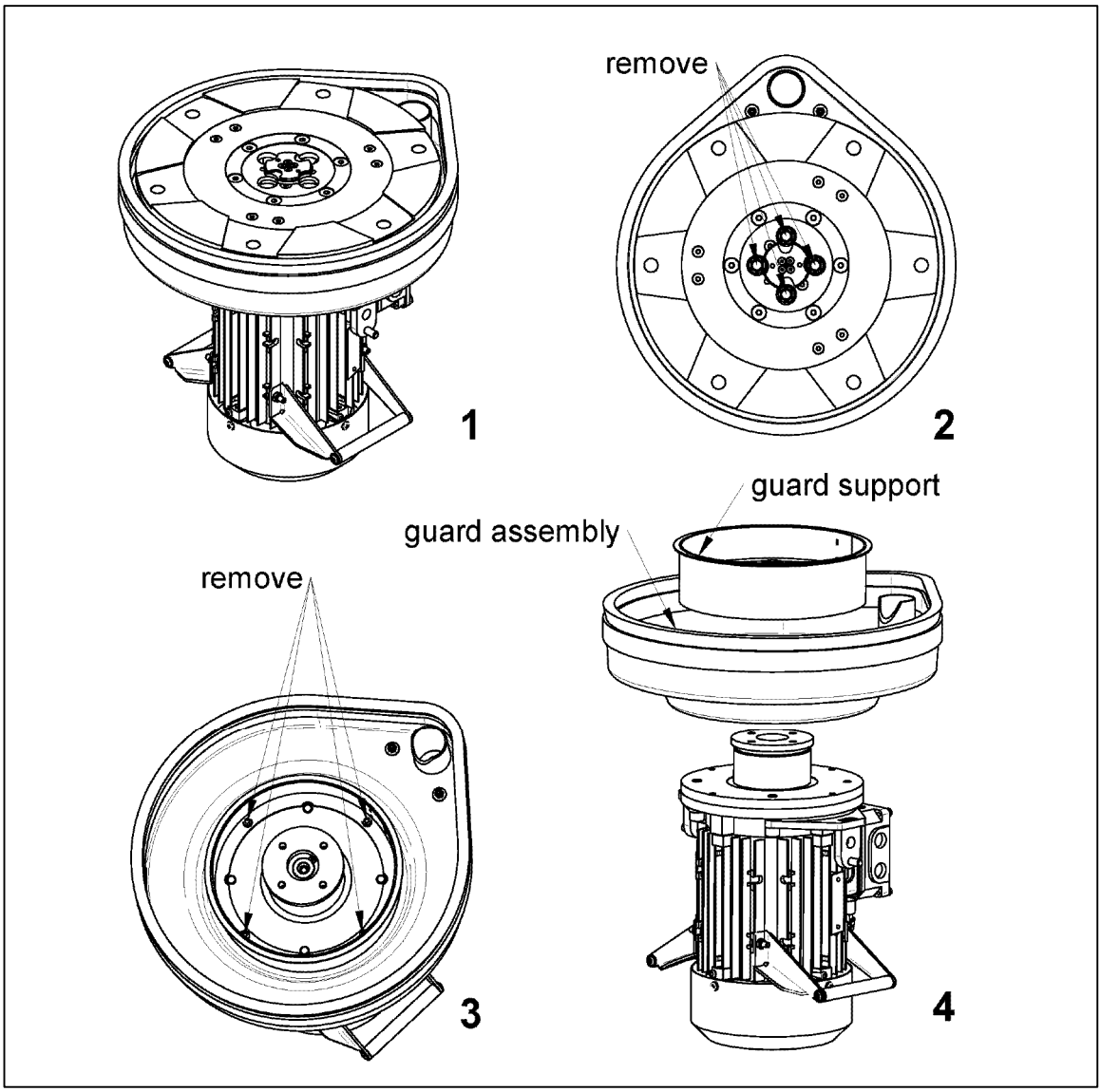

8.3 TOOL HOLDER – DISSASEMBLY, REPLACEMENT OF ELASTIC ELEMENT AND BUFFERS

To replace worn out parts such as the elastic element, buffers etc., begin by removing the TOOL HOLDER from the machine (section 8.2). With the tool holder removed:

[1] Lift up the locking pin using a screwdriver and slide out the retaining washer.

[2] Take out all of the screws on the buffers and the nuts of the elastic element. Remove the flange.

[3] Flip the tool holder and remove the screws shown.

[4] Flip the tool holder again. Now the elastic element and buffers can be removed.

[5] With the buffers and elastic element removed, clean thoroughly the plate before proceeding.

[6] Rebuild the holder using new buffers, elastic element and screws. Slide back the retaining washer and push down on the locking pin. This will prevent the washer from falling out when mounting the holder on the machine.

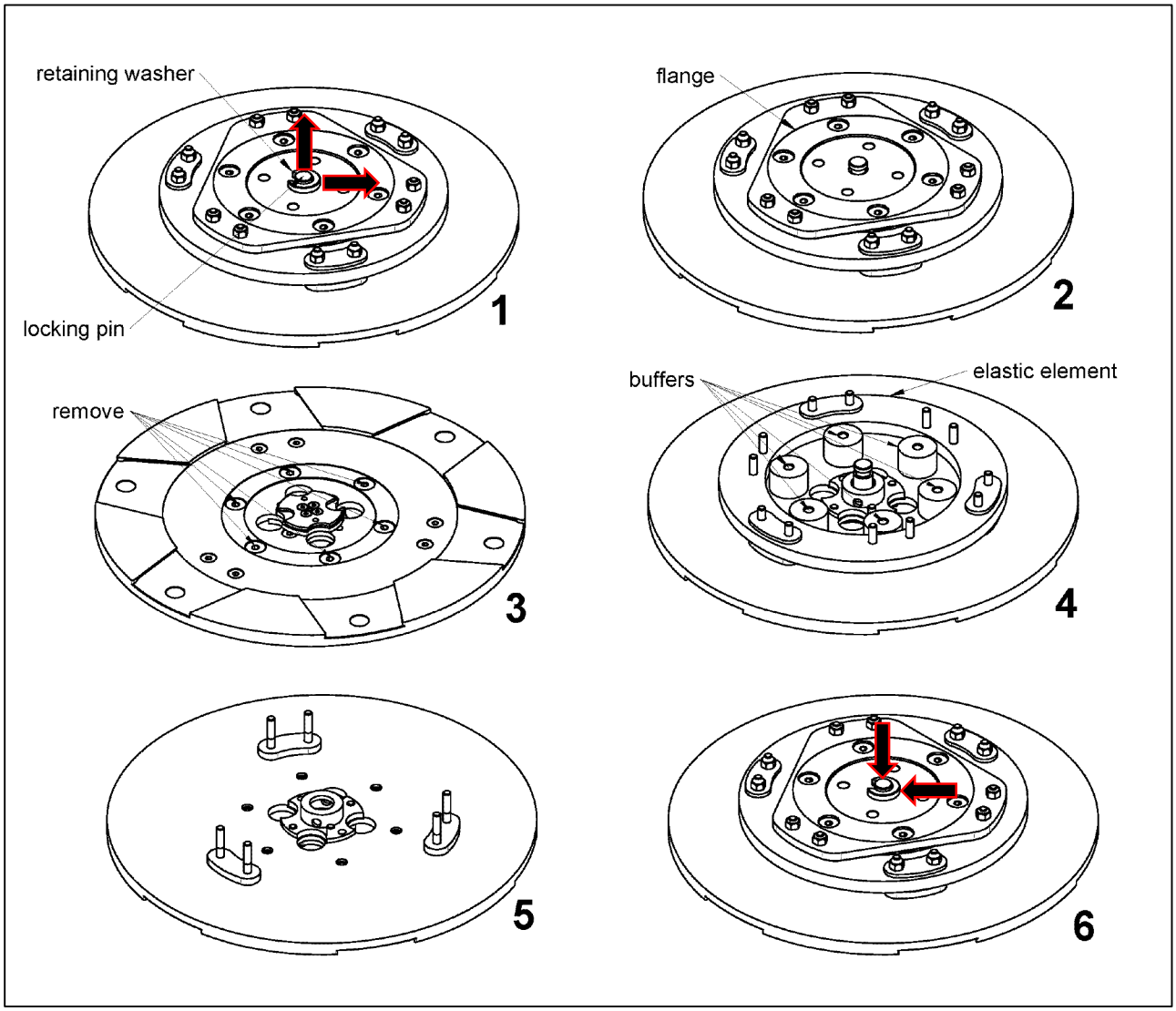

9. DISPOSAL

If your machine after time is not usable or needs to be replaced, send the machine back to Superabrasive or a local distributor, where a professional disposal complying with the environment laws and directives is guaranteed.

10. MANUFACTURER'S CONTACTS

If you need to contact Superabrasive Ltd. with technical support questions, below is the contact information.

Address: Superabrasive Ltd.
Rabotnicheska 2A
BG-6140 Krun
Bulgaria

Email: factory@superabrasive.com
Tel.: +359 431 6 44 77
Fax: +359 431 6 44 66
Website: www.superabrasive.com